Chevy LS3
Assembly Instructions

Recommended Tools

Assortment of drill bits. Small metric or numbered assortment.
Pin vise for drill bits
M3 Tap
Hacksaw and dremel with cut off wheel
Super Glue - Thin and Medium Gap Filling
I use this kit with all the viscosities.
https://www.amazon.com/2-P10KIT-2-P10-Adhesive-Kit/dp/B00008US7G/ref=sr_1_2?ie=UTF8&qid=1537644052&sr=8-2&keywords=2p10
Thread Locker
Small file set
Sand Paper
Allen keys. 1.5, 2, and 2.5mm. Best to have ball end
Lubricant for cam lobes. Recommend SuperLube grease
Soldering Iron for electronics

Printed 4mm drill stop or drill bit stop collar.

Time….

Chevy LS3 - Non Printed Parts List & Location

Part	Quantity	Item Location	Notes
6701zz Bearing	13	Crankshaft - 13 pcs	
6702zz Bearing	5	Camshaft - 5 pcs	
m3 nut	45	Camshaft - 11 pcs Crankshaft - 9 pcs Piston Wrist Pins - 8 pcs Starter Gear Drive - 1pcs Valve Spring Retainers - 16 pcs	
M3 x 3mm Threaded Insert	18	Rocker Arm Bolt Holes - 16 pcs Starter Mount in Engine Block - 2 pcs	
m3 x 4mm set screw	1	Starter Gear Drive - 1 pcs	
M3 8mm Set Screw	1	Cam gear lock pin - 1 pcs	
m3 6mm Hex Screw	48	Valve Covers 4 each - 8 pcs total Cylinder Heads 15 each - 30 pcs total Intake Manifold 10 pcs	
M3 x 3mm SHCS	10	Main Bearing Cap Side Bolts - 10 pcs	
m3 5mm SHCS	8	Valve cover guide bolts - 8 pcs	
M3 x 8mm SHCS	26	Lifter Guide Holding Bolt - 4 pcs Flywheel to Crankshaft - 6 pcs Rear Main Cover - 12 pcs Timing Chain Tensioner - 2 pcs Starter mount geared electric motor - 2 pcs	
m3 12mm SHCS	16	Rocker Arm Holding Bolts - 16 pcs	
m3 16mm SHCS	16	Connecting Rod Bearings caps - 16pcs	
M3 18mm SHCS	3	Crankshaft - 3 pcs	
M3 20mm SHCS	1	Crankshaft - 1pcs	

M3 25mm SHCS	33	Main Bearing Caps - 20 pcs Piston wrist pins - 8 pcs Crankshaft - 5 pcs	
M3 40mm SHCS	2	Start mount to engine block - 2 pcs	
M3 50mm SHCS	16	Valve stems - 16 pcs	Cut down to 42mm SHCS grind tip of threaded end to a dome
M3 x 175mm Threaded Rod	1	Camshaft	
3mm(or 1/8") x 65mm Rod	16	Push rods	Cut down from 3mm or 1/8" rods Grind one end to a dome
.40" ID x .45" OD x .75"-1.25" L Spring	16	Valve Springs	
4mm x 2mm Disc Magnet	96	Exhuast Headers 4 each - 8pcs total Front timing cover - 4 pcs Cylinder heads 12 each - 24 pcs total Engine Block - 48 pcs Intake Manifold - 4 pcs Valley Plate - 4 pcs Oil Pan - 4 pcs	
.25 Steel Ball Bearing	16	Lifters	Glue to end of lifter
Timing Belt GT2 100T 200mm 3.5mm wide	1	Timing Chain	
12V 1A Power Supply	1		
Motor Speed Controller	1		
500rpm DC Geared Motor	1		
DC Female Power Jack	2		
DC Dongle (Female end)	1		

Printed Parts List

Printed Parts	Quantity	Printing Notes	Final print height **Critical dimensions are in red**	Finishing Notes
Engine Block	1	There are two STL files. One tricks your slicer to put supports under the main bearings and rear flange. The other does not.		Multiple holes will need to be drilled/tapped Clean up cylinder walls so piston slides smoothly
Crankshaft 1	1	Print with high infill (~80% or higher)	0.41" 10.5mm	Drill out hole to accept a M3 screw. Make sure both top and bottom mating surfaces are flat. May need to clearance surface where bearing slides on to.
Crankshaft 2	1	Same as above	0.41" 10.5mm	Same as above
Crankshaft 3	1	Same as above	0.41" 10.5mm	Same as above
Crankshaft 4	1	Same as above	0.41" 10.5mm	Same as above
Crankshaft 5	1	Same as above	0.41" 10.5mm	Same as above
Crankshaft 6	1	Same as above	0.41" 10.5mm	Same as above
Crankshaft 7	1	Same as above	0.41" 10.5mm	Same as above
Crankshaft 8	1	Same as above	0.56" 14.3mm	Same as above
Crankshaft spacer 1	4	Same as above	0.72" 18.3mm	Same as above
Rear Main spacer	1	Same as above	0.20" 5.0mm	Same as above
Crankshaft Output Flange	1	Same as above	0.40" 10.2mm	Drill out center hole to accept a M3 screw. Drill out flywheel mounting holes to 4mm for magnets. Drill Out and insert threaded insert in flywheel holding hole.
Crank Gear	1	Same as above	0.52" 13.2mm	Same as above
Main Bearing Cap 1	2			Drill out bottom holes to accept a M3 screw. Drill and tap side holes for M3 screw, if using.
Main Bearing Cap 2	3			Drill out holes to accept a M3 screw

Piston	8			Drill out holes to accept a M3 screw
Connecting Rod	8			Drill out wrist pin hole to accept a M3 screw. Drill and tap bearing cap holes for M3 screw
Connecting Rod Bearing Cap	8			Drill out holes to accept a M3 screw
Camshaft Lobe 1	1	Print with high infill (~80% or higher)	0.217" 5.51mm	Drill out hole to accept a M3 screw Flat sand to correct thickness if needed
Camshaft Lobe 2	1	Same as above	0.226" 5.73mm	Same as above10.7/
Camshaft Lobe 3	1	Same as above	0.417" 10.58mm	Same as above
Camshaft Lobe 4	1	Same as above	0.226" 5.73mm	Same as above
Camshaft Lobe 5	1	Same as above	0.217" 5.51mm	Same as above
Camshaft Lobe 6	1	Same as above	0.226" 5.73mm	Same as above
Camshaft Lobe 7	1	Same as above	0.417" 10.58mm	Same as above
Camshaft Lobe 8	1	Same as above	0.226" 5.73mm	Same as above
Camshaft Lobe 9	1	Same as above	0.217" 5.51mm	Same as above
Camshaft Lobe 10	1	Same as above	0.226" 5.73mm	Same as above
Camshaft Lobe 11	1	Same as above	0.417" 10.58mm	Same as above
Camshaft Lobe 12	1	Same as above	0.226" 5.73mm	Same as above
Camshaft Lobe 13	1	Same as above	0.217" 5.51mm	Same as above
Camshaft Lobe 14	1	Same as above	0.226" 5.73mm	Same as above
Camshaft Lobe 15	1	Same as above	0.417" 10.58mm	Same as above
Camshaft Lobe 16	1	Same as above	0.226" 5.73mm	Same as above

Cam Bearing Surface 1	4	Same as above	0.184" 4.67mm	Drill out hole to accept M3 screw. May need to clearance bearing surface.
Cam Bearing Surface 2	1	Same as above	0.184" 4.67mm	Drill out hole to accept M3 screw. May need to clearance bearing surface.
Cam Bearing Surface 3	5	Same as above	0.270" 6.85mm	Same as above
Cam Gear	1	Same as above		Drill out hole to accept a M3 screw
Rear Main Cover	1			Drill out hole to accept a M3 screw
Cylinder Head	2	Print with supports touching build plate		Drill out valve stem holes to slightly larger than 3mm so that a 3mm rod slides smoothly. See cylinder head drawing for magnet and insert locations.
Exhaust Valve 2	8			Clearance hole so that the head of a SHCS fits tightly.
Intake Valve 2	8			Clearance hole so that the head of a SHCS fits tightly.
Spring Retainer	16			Drill out hole to accept a M3 screw
Rocker Arm	16	Print with support "Everywhere" Good idea to print more than needed. Some tend to break when removing support material.		Remove support material from rocker arm. Clearance hole so that the rocker arm pin slides smoothly through.
Rocker Rail	2			Drill out holes to accept a M3 screw
rocker arm pin	16			Drill out hole to accept a M3 screw. Smooth surface of pin so that is slides smoothly though the rocker arm.
Timing Chain Tensioner	1			
Oil Pan	1	Print with or without supports depending on your machine		
Flywheel, drive teeth	1			Clearance center hole to fit onto Crankshaft Output

				Flange. Drill out mounting holes to 4mm for magnets.
Starter Mount	1			Drill out holes to accept a M3 screw
Starter Drive Gear	1			Drill out center hole to 6mm. Drill out set screw hole to 3mm.
Valve Cover Passenger Side	1	Print with or without supports depending on your machine		
Valve Cover Drivers Side	1	Print with or without supports depending on your machine		
Intake Manifold	1	Print without supports		
Valley Plate	1			Clearance holes to 3mm for magnets
Timing Cover	1	Print with supports touching build plate		
EXHAUST HEADER RIGHT	1	Print with supports touching build plate		
EXHAUST HEADER LEFT	1	Print with supports touching build plate		
Lifter Guide	4			Drill out holes to accept a M3 screw
Lifter	16			Drill out center hole to slightly larger than 3mm to accommodate push rod.

How to install threaded inserts

Using a #20 drill bit or similar, set depth stop to slightly deeper than insert.

Drill out hole for insert

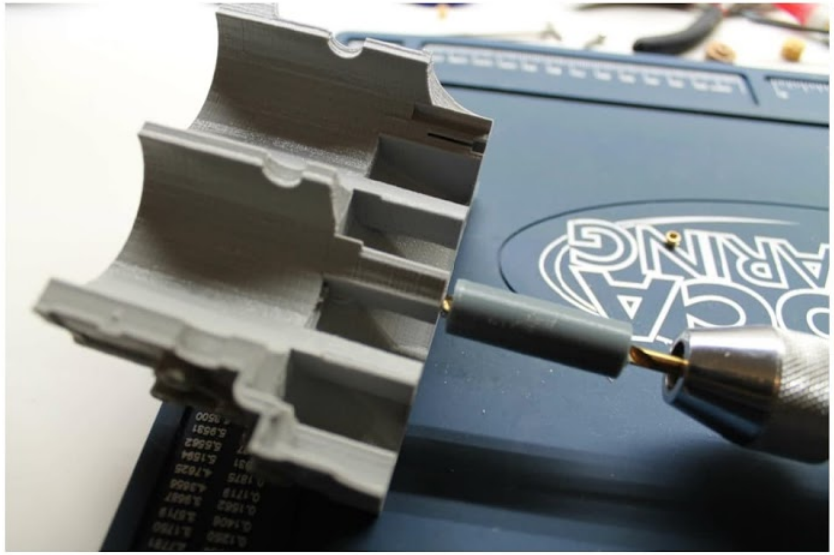

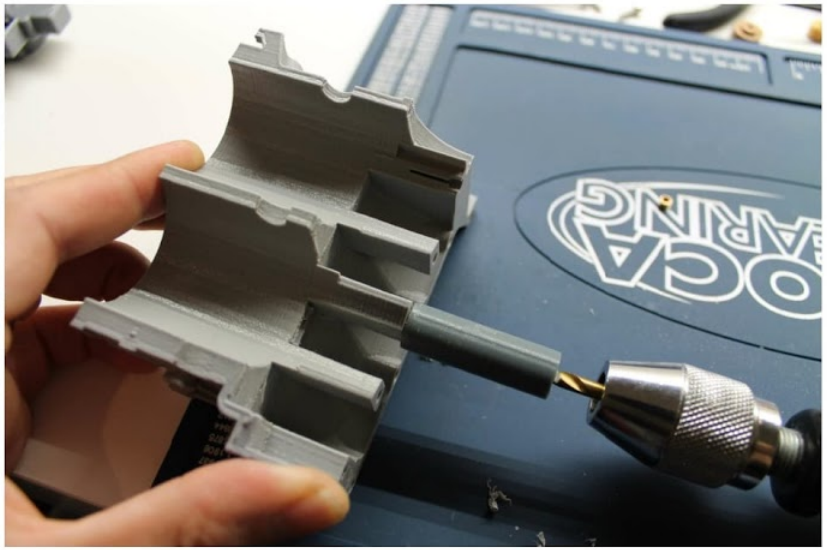

Using an M3 screw as a holder, apply super glue to the outside of the threaded insert. Medium build super glue works best.
Tip: Grease can be applied to the threads of the screw to prevent super gluing the insert to the screw.

Install insert and remove screw. Making sure that insert is aligned with hole.

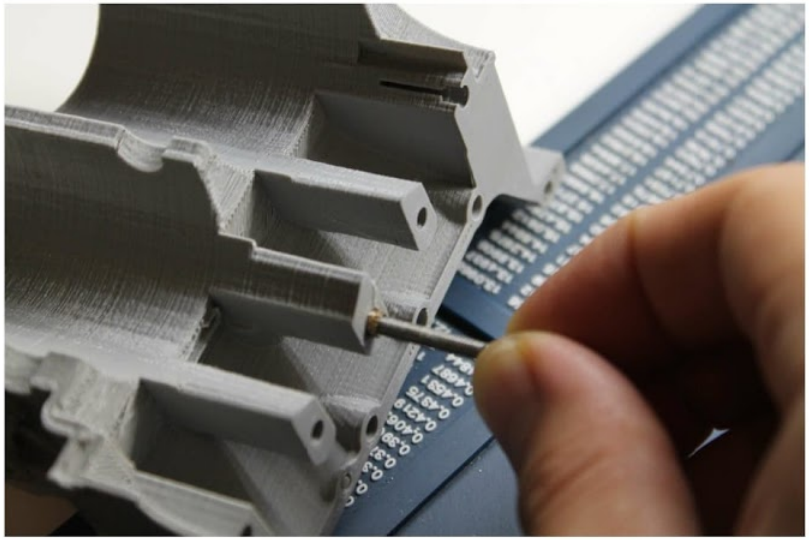

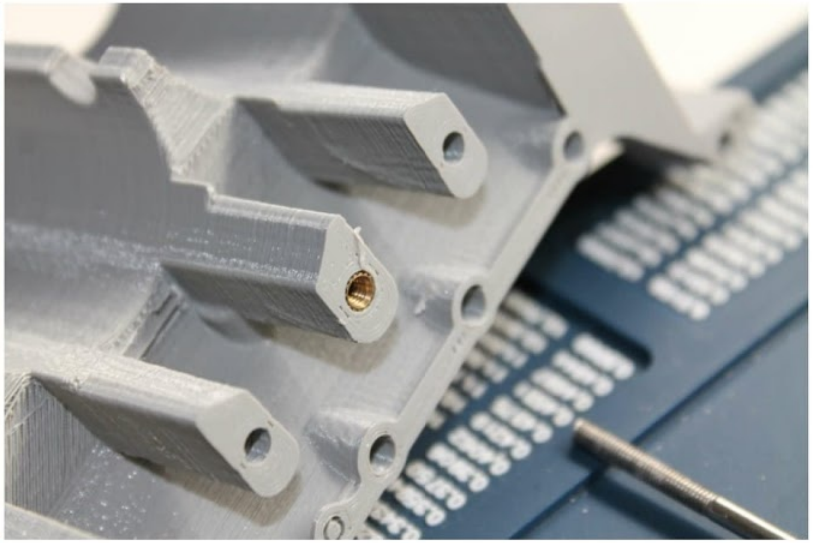

Insert & Magnet Locations

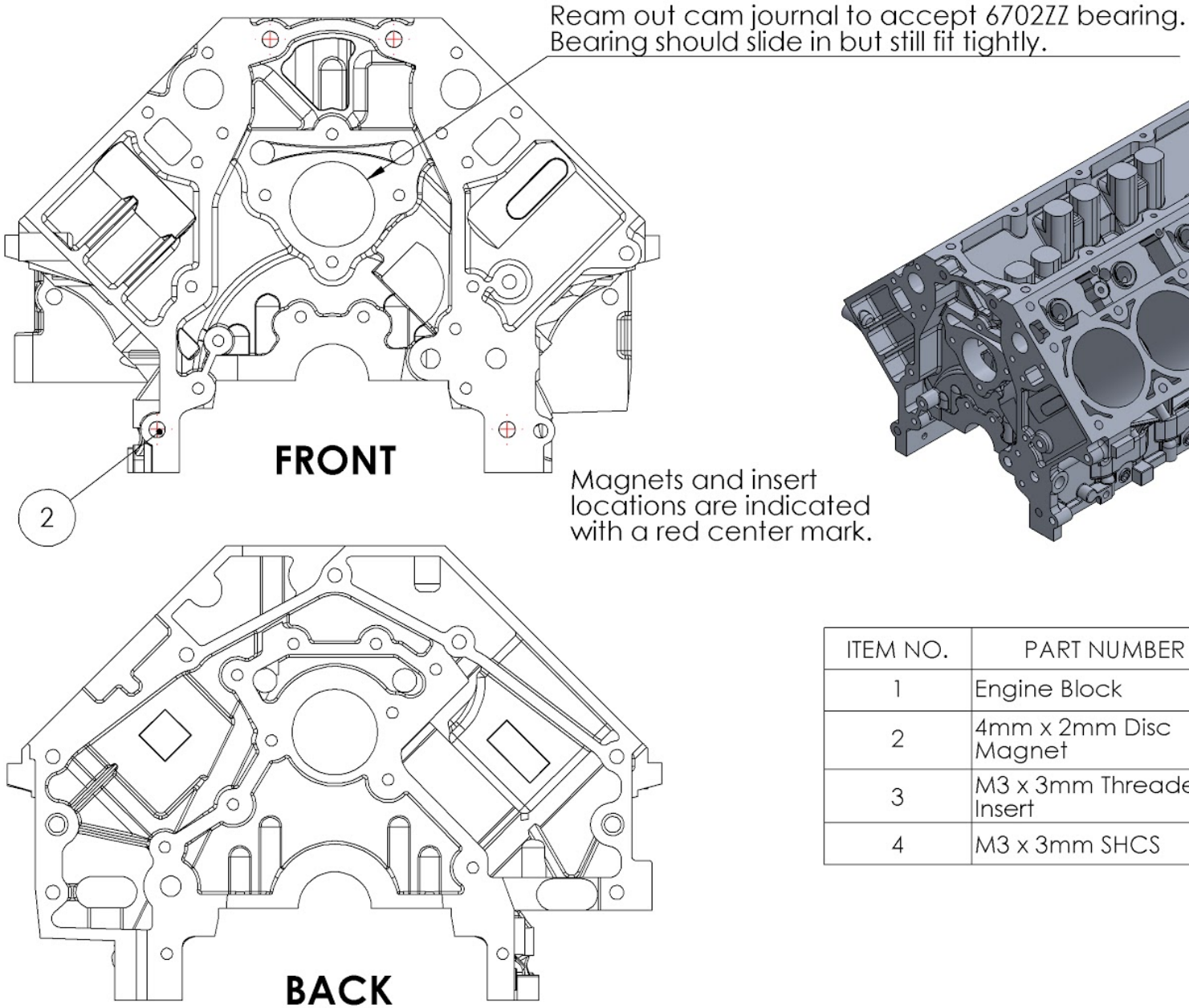

ITEM NO.	PART NUMBER	QTY.
1	Engine Block	1
2	4mm x 2mm Disc Magnet	36
3	M3 x 3mm Threaded Insert	2
4	M3 x 3mm SHCS	10

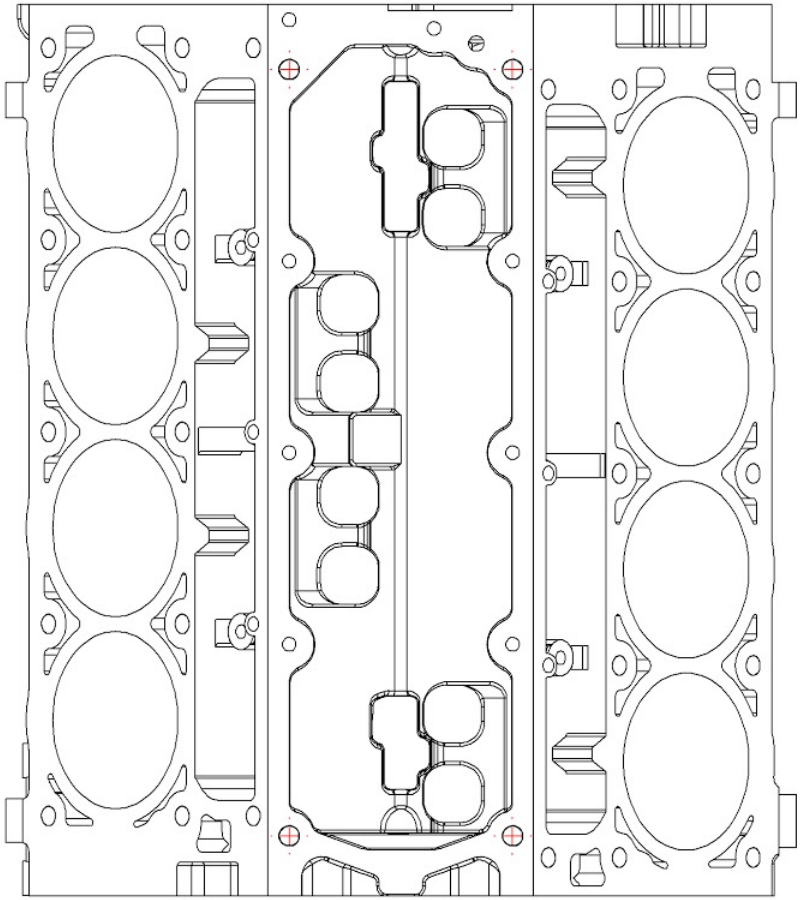

TOP

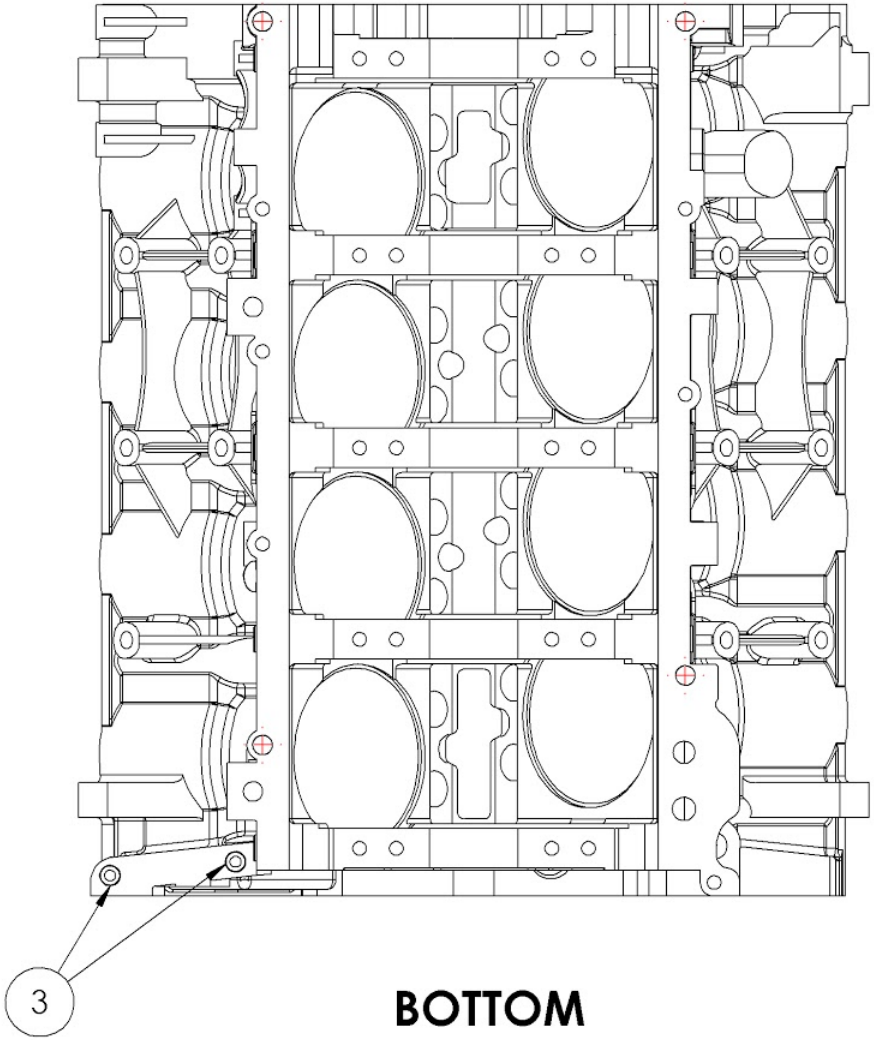

BOTTOM

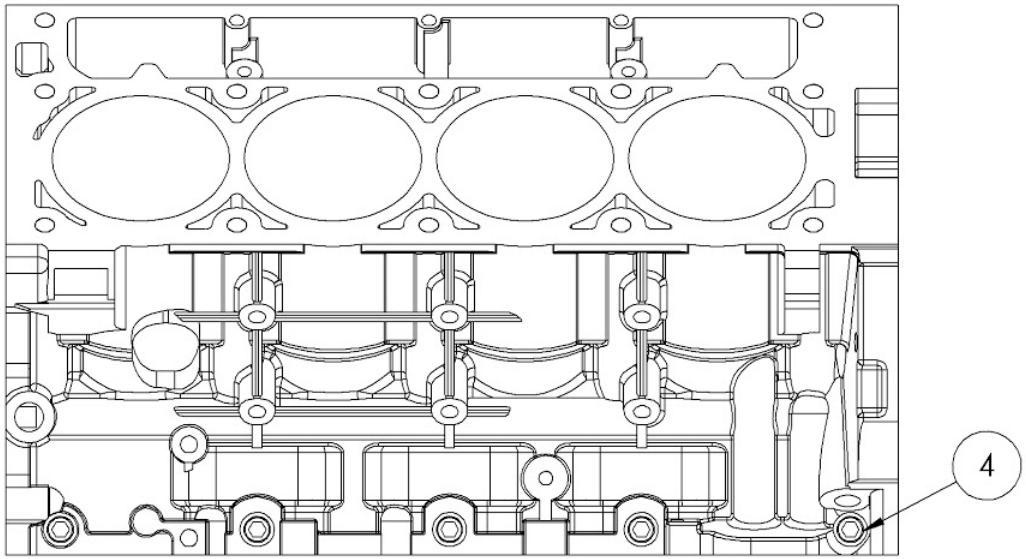

Drivers Side

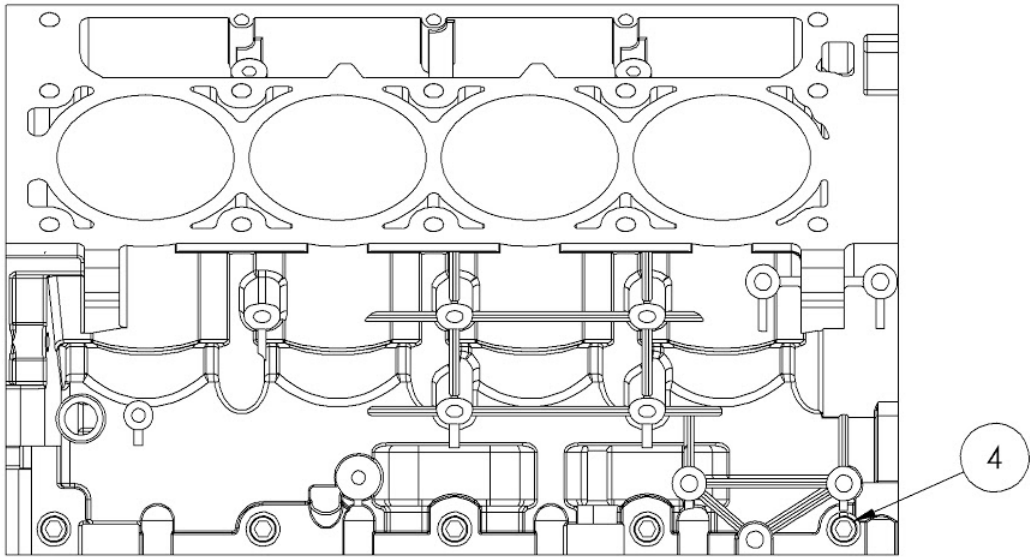

Passenger Side

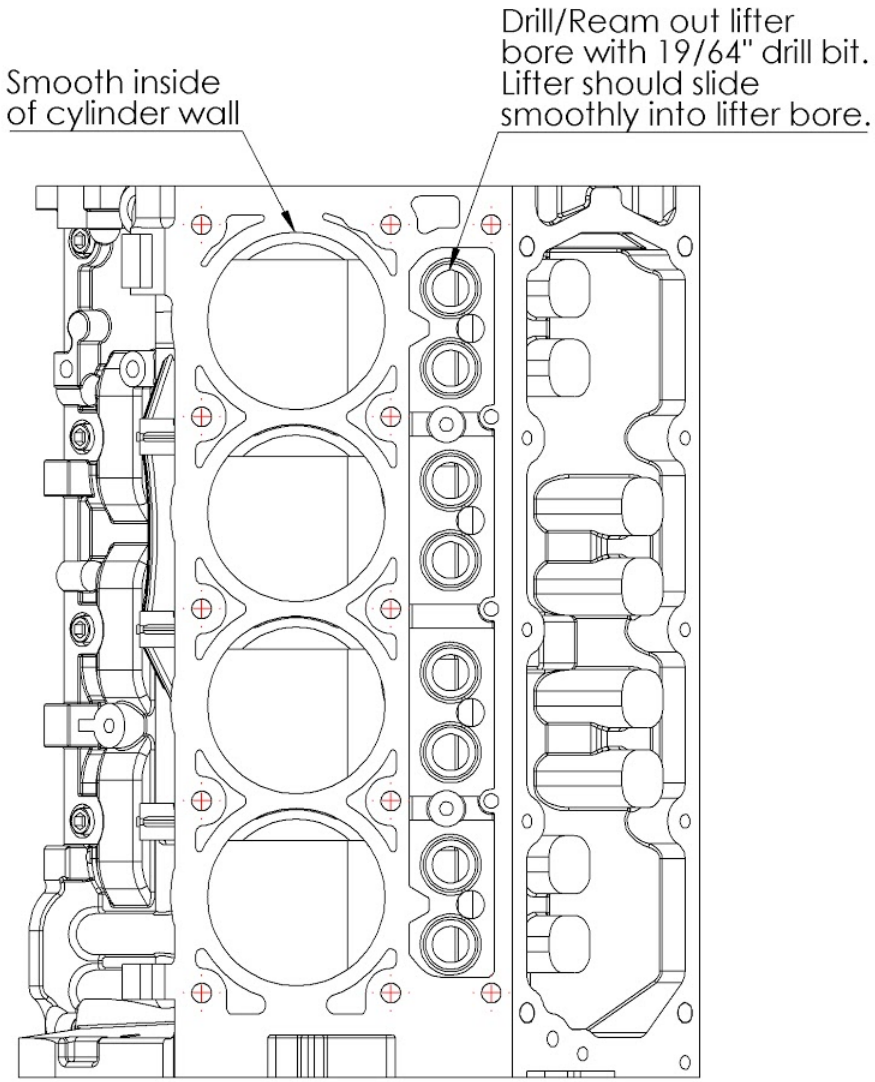

Drivers Side Deck Surface

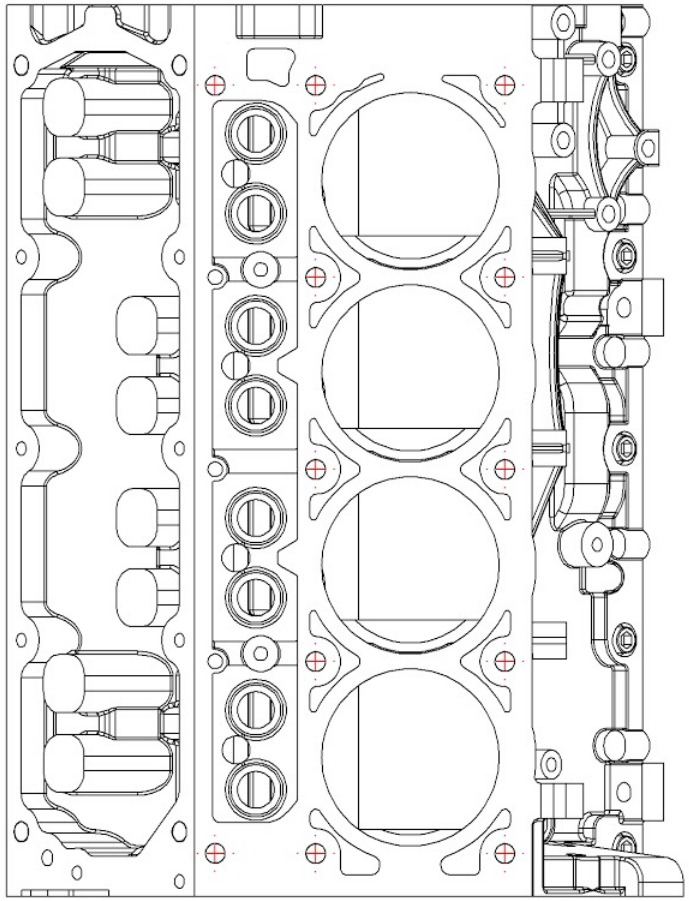

Passenger Side Deck Surface

Cylinder head

ITEM NO.	PART NUMBER	QTY.
1	Cylinder Head	1
2	4mm x 2mm Disc Magnet	21
3	M3 x 3mm Threaded Insert	8
4	m3 6mm Hex Screw	15

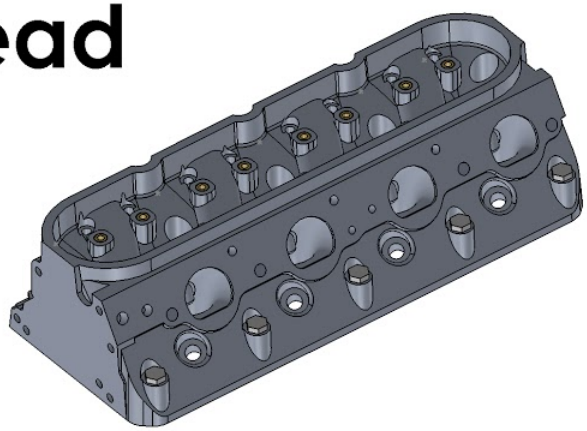

Make sure all magnet match polarity with their corresponding mating surfaces.

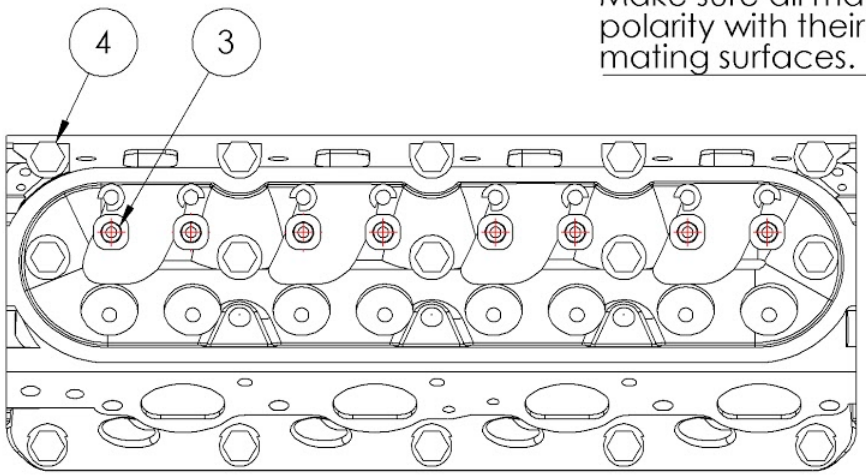

Top

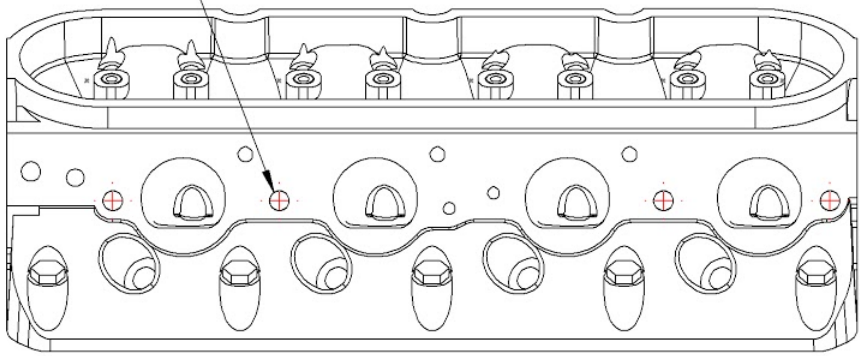

Exhaust Header Mating Surface

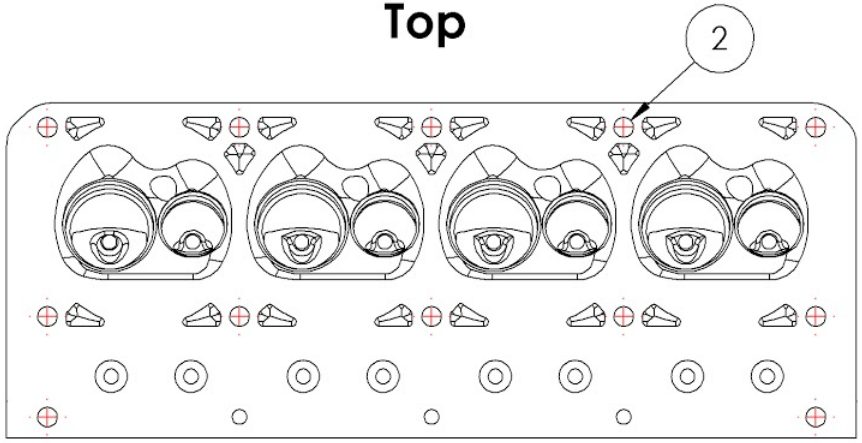

Bottom

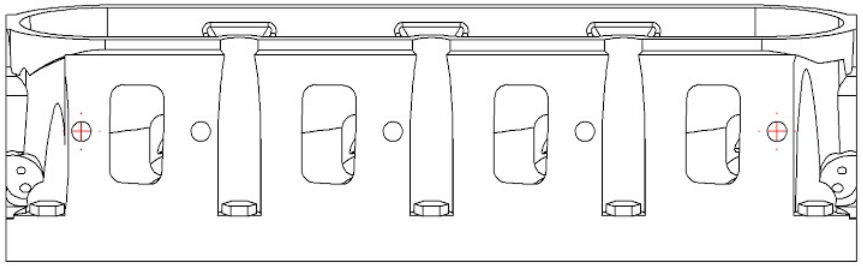

Intake Manifold Mating Surface

Timing Cover

Valley Plate Cover

Make sure all magnet match polarity with their corresponding mating surfaces.

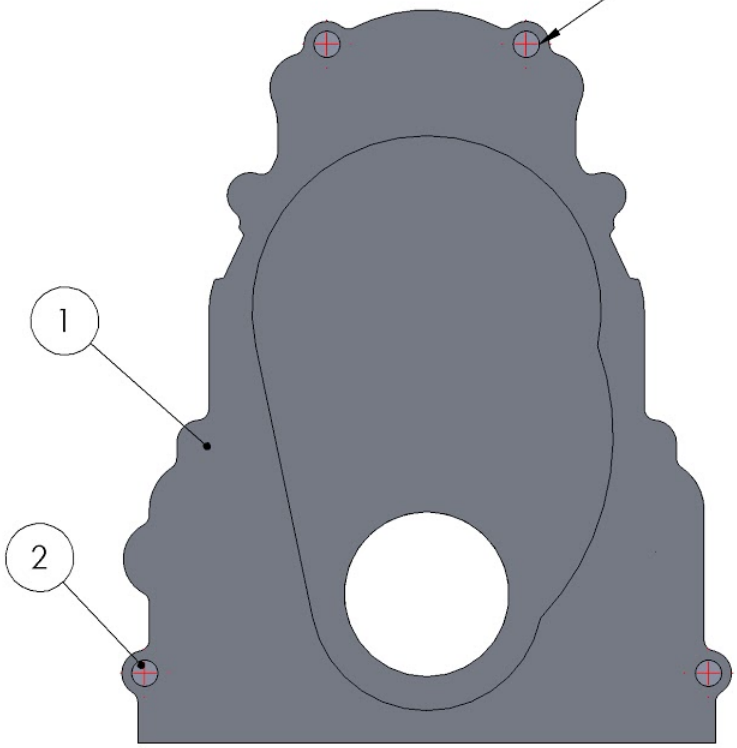

Back

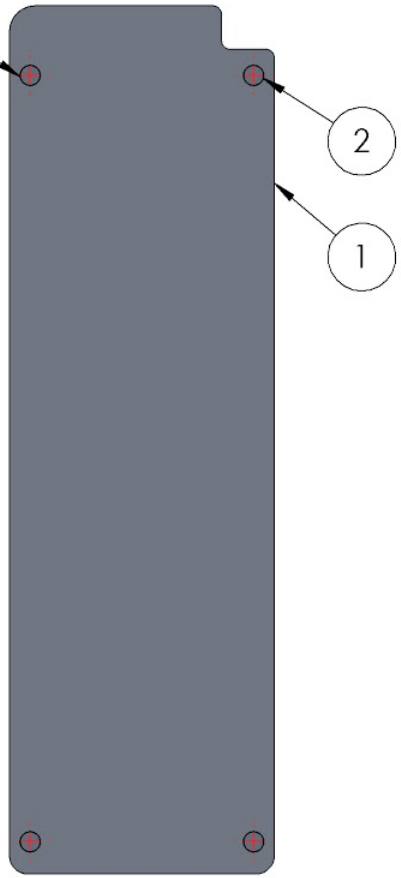

ITEM NO.	PART NUMBER	QTY.
1	Timing Cover	1
2	4mm x 2mm Disc Magnet	4

ITEM NO.	PART NUMBER	QTY.
1	Valley Plate	1
2	4mm x 2mm Disc Magnet	4

Exhaust Headers

ITEM NO.	PART NUMBER	QTY.
1	LS3 Header - Passenger Side 2	1
2	4mm x 2mm Disc Magnet	4

Make sure all magnet match polarity with their corresponding mating surfaces.

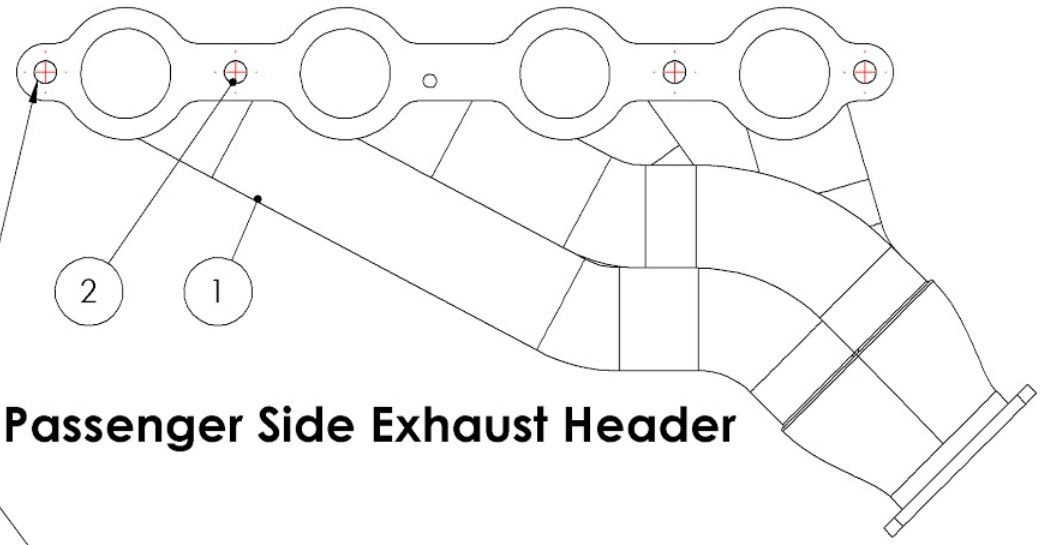

Passenger Side Exhaust Header

ITEM NO.	PART NUMBER	QTY.
1	LS3 Header - Driver Side	1
2	4mm x 2mm Disc Magnet	4

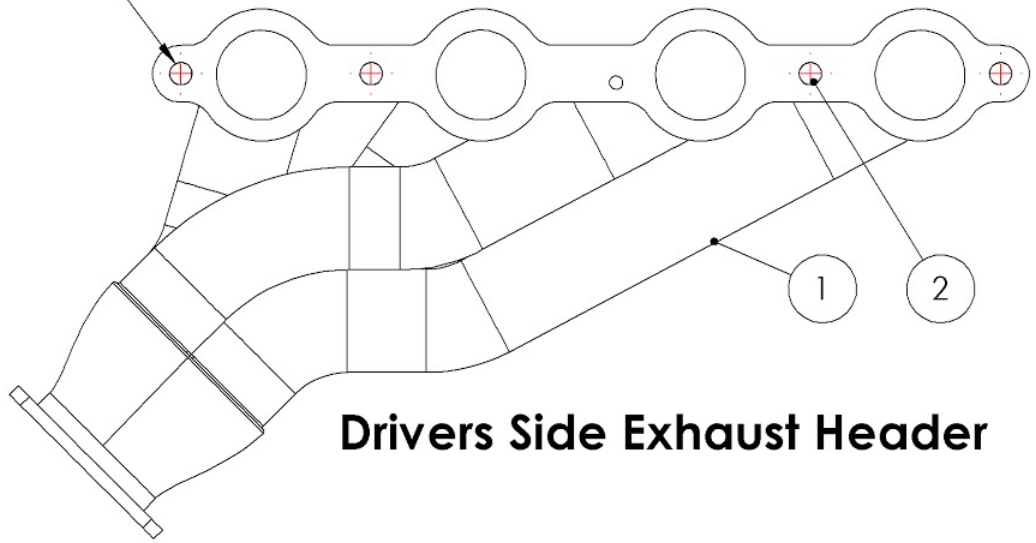

Drivers Side Exhaust Header

Oil Pan Assembly

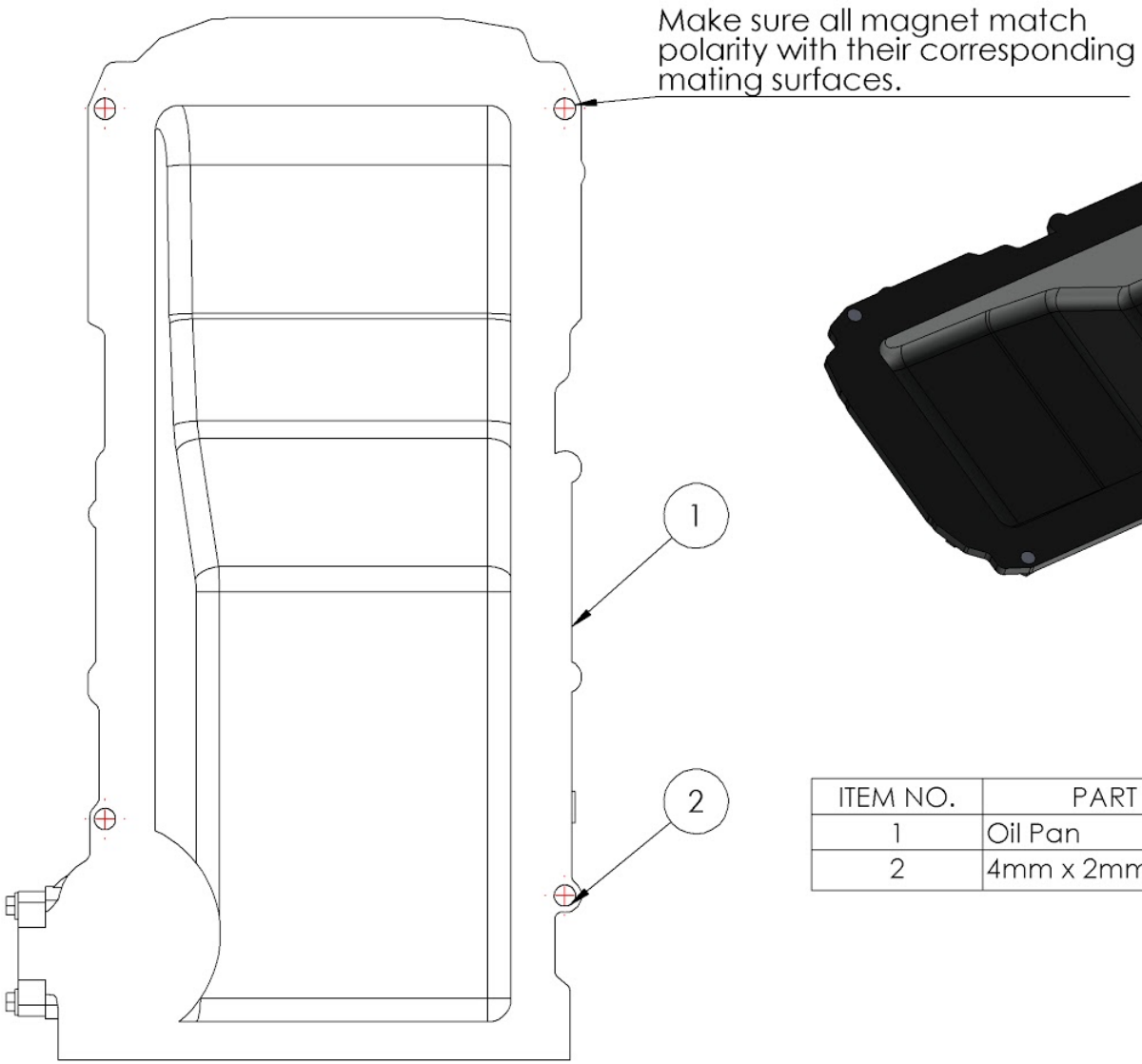

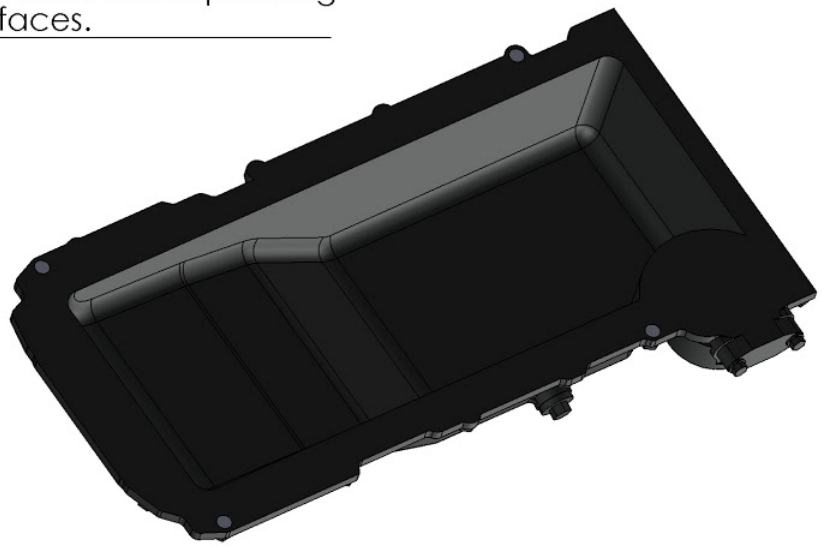

ITEM NO.	PART NUMBER	QTY.
1	Oil Pan	1
2	4mm x 2mm Disc Magnet	4

Intake Manifold Assembly

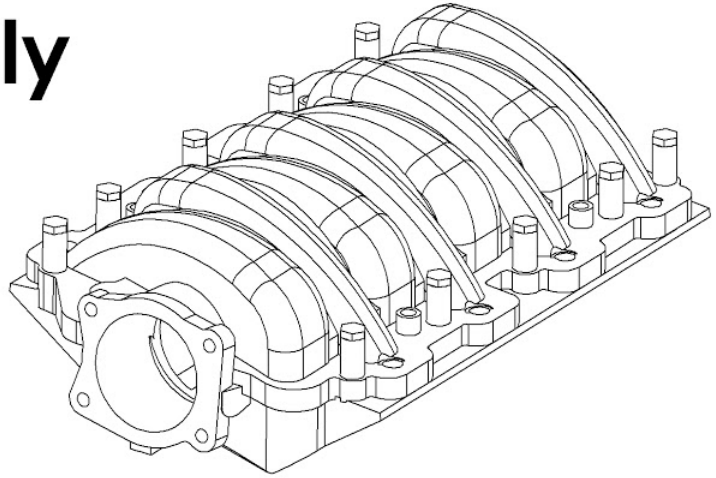

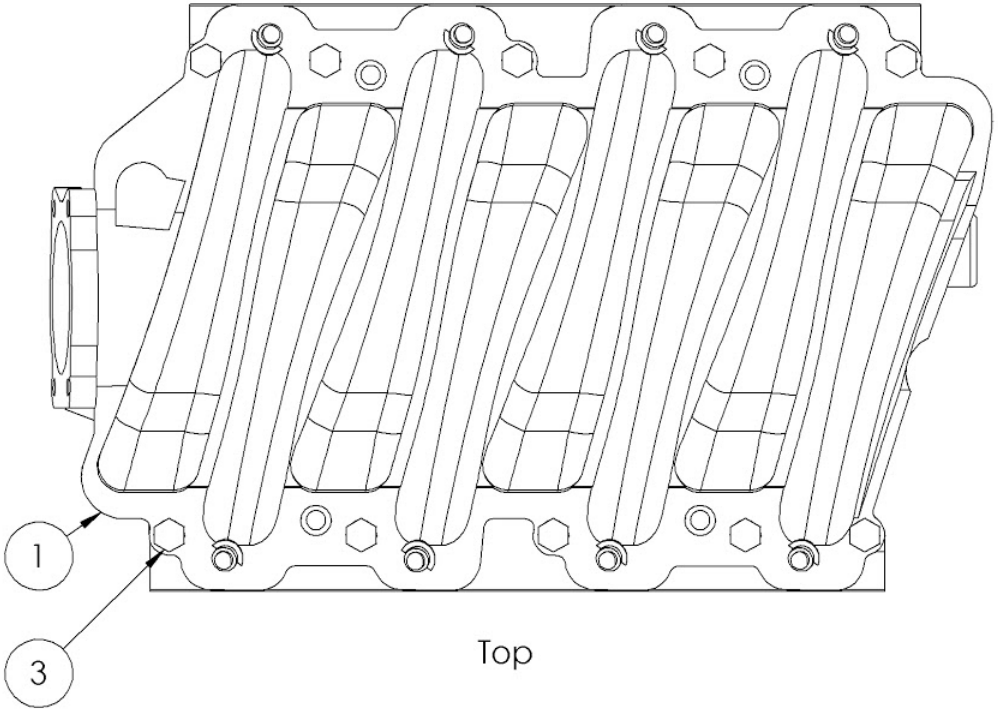

ITEM NO.	PART NUMBER	QTY.
1	Intake Manifold	1
2	4mm x 2mm Disc Magnet	4
3	m3 6mm Hex Screw	10

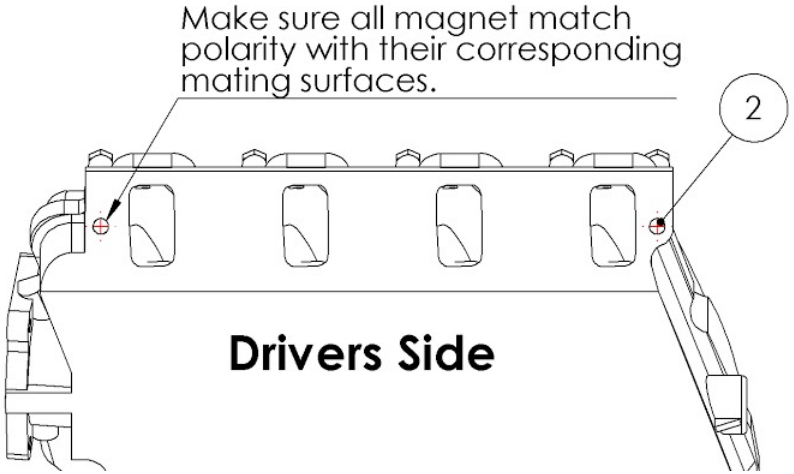

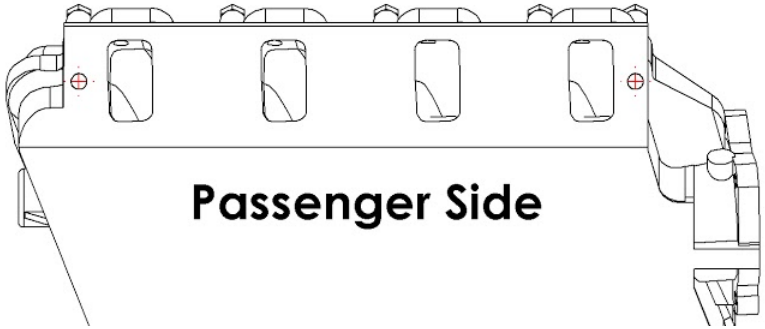

Main Bearing Cap Installation

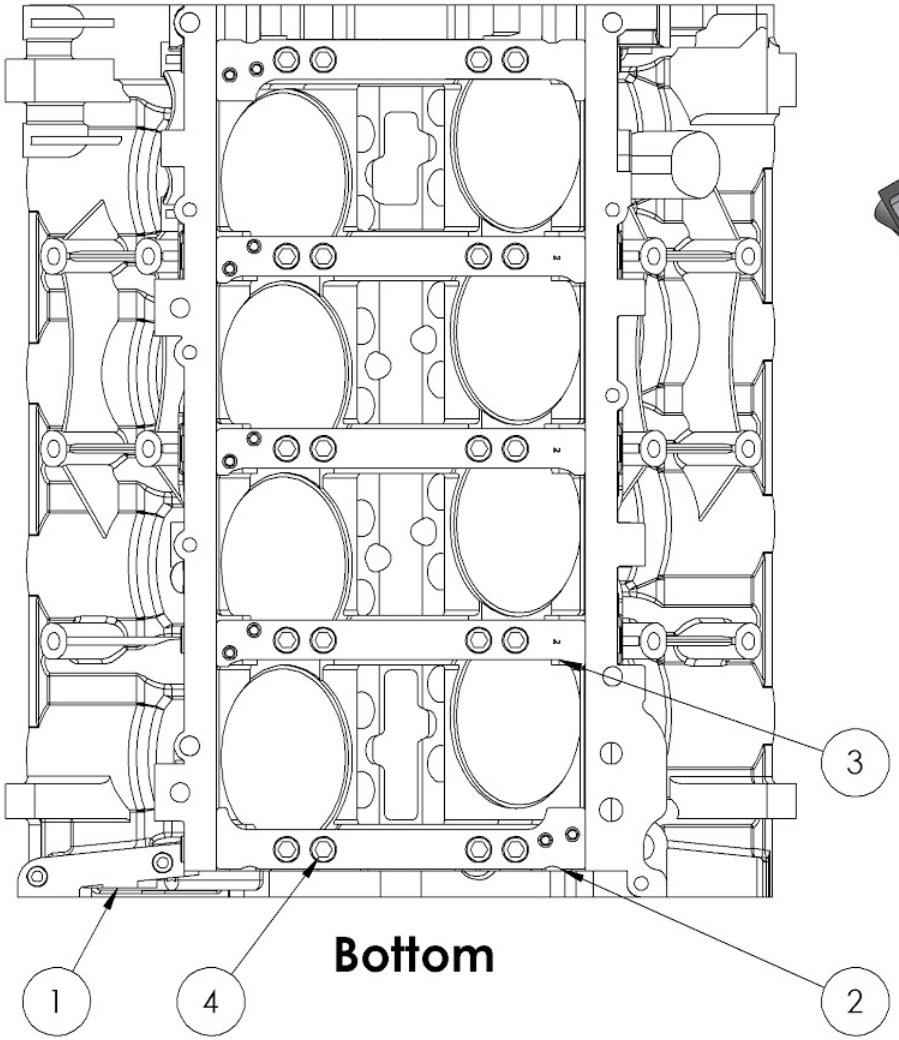

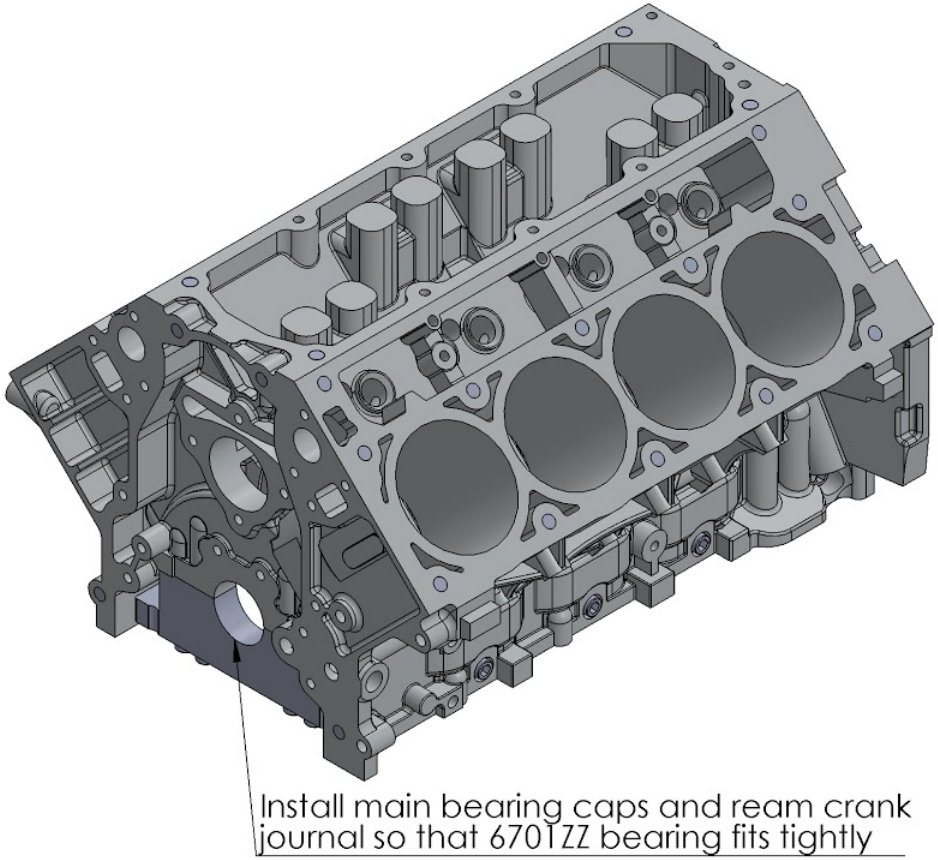

ITEM NO.	PART NUMBER	QTY.
1	Block with inserts and magnets	1
2	Main Bearing Cap 1	2
3	Main Bearing Cap 2	3
4	M3 25mm SHCS	20

Crankshaft Assembly

ITEM NO.	PART NUMBER	Default/ QTY.
1	Crankshaft 1	1
2	Crankshaft 2	1
3	Crankshaft 3	1
4	Crankshaft 4	1
5	Crankshaft 5	1
6	Crankshaft 6	1
7	Crankshaft 7	1
8	Crankshaft 8	1
9	Crank Gear	1
10	Crankshaft Output Flange	1
11	Crankshaft spacer 1	4
12	Rear Main spacer	1
13	6701zz Bearing	13
14	M3 18mm SHCS	3
15	M3 20mm SHCS	1
16	M3 25mm SHCS	5
17	m3 nut	9

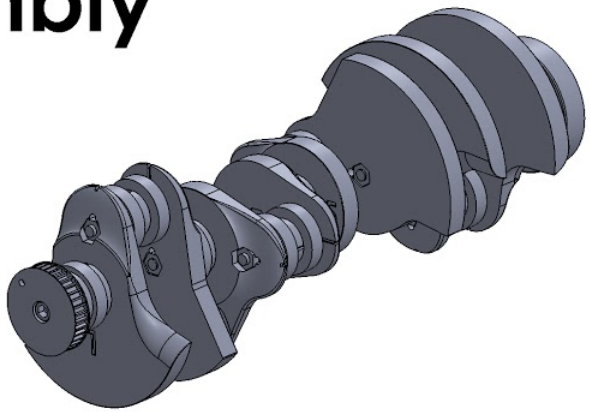

Step 1

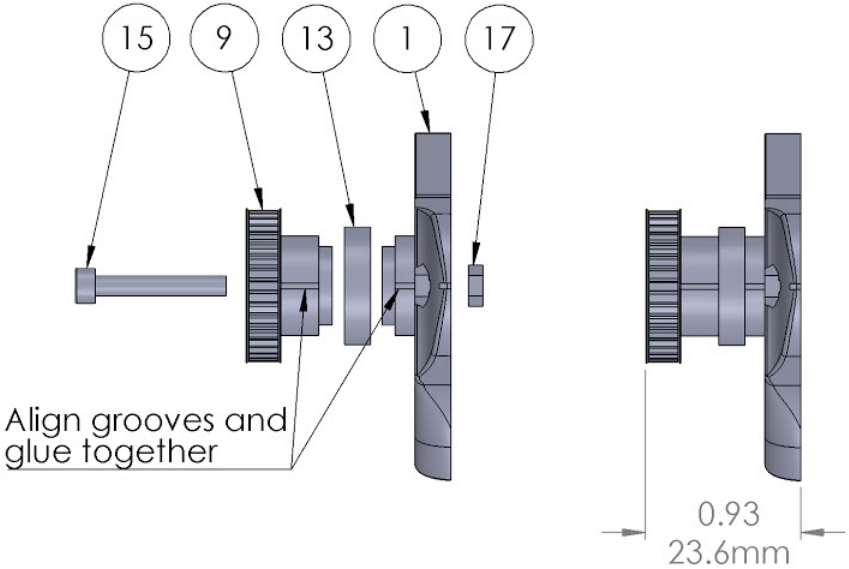

Step 2

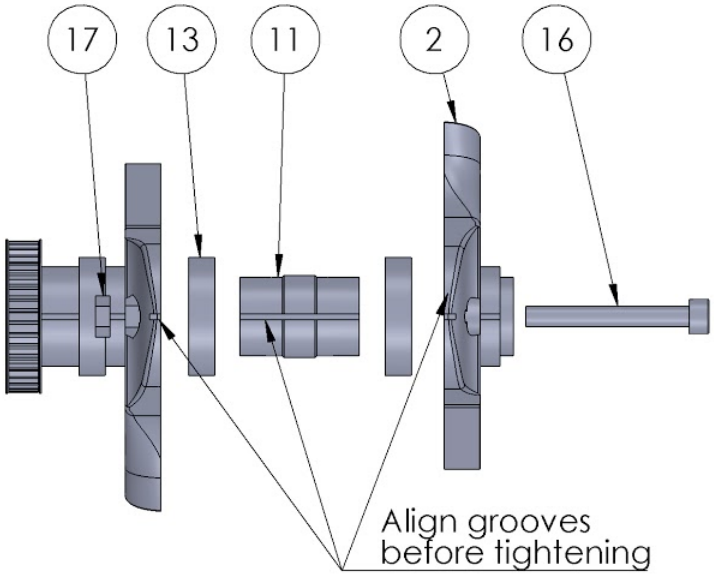
17
13
11
2
16
Align grooves
before tightening

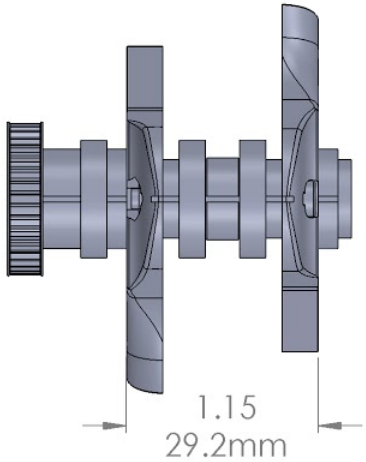
1.15
29.2mm

Step 3

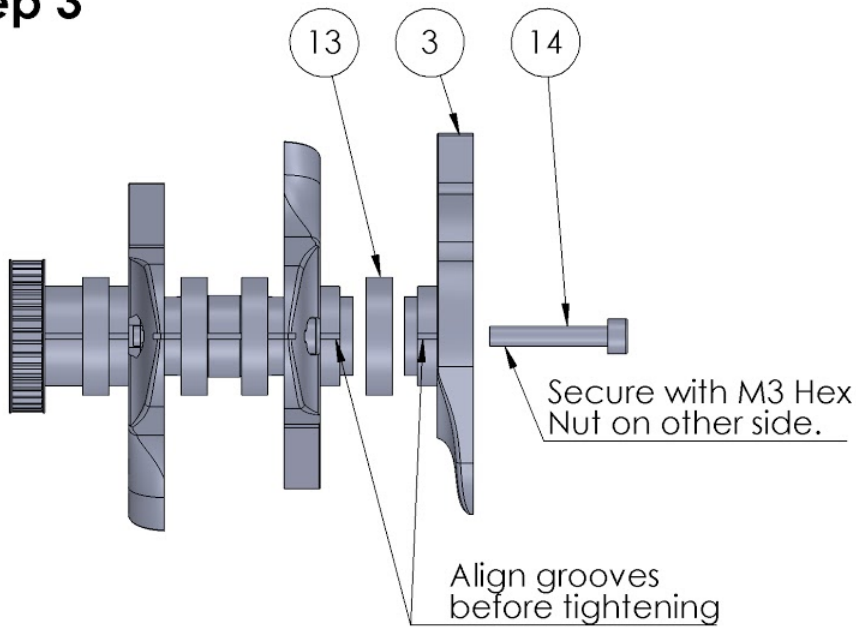
13
3
14
Secure with M3 Hex
Nut on other side.
Align grooves
before tightening

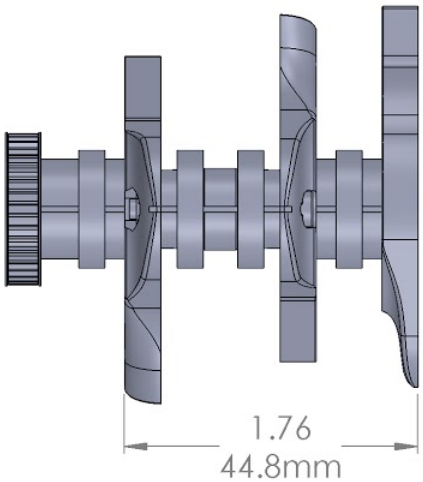
1.76
44.8mm

Step 4

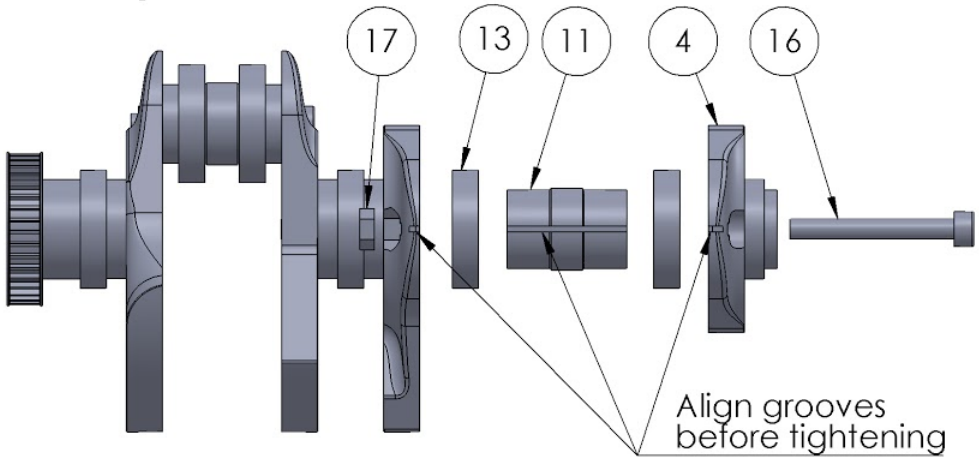
17
13
11
4
16
Align grooves
before tightening

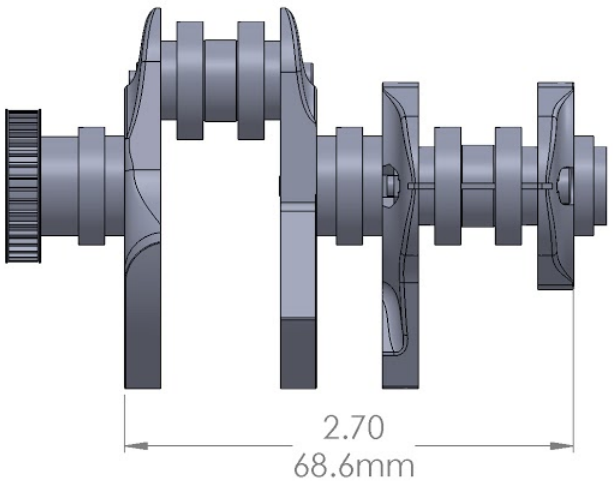
2.70
68.6mm

Step 5

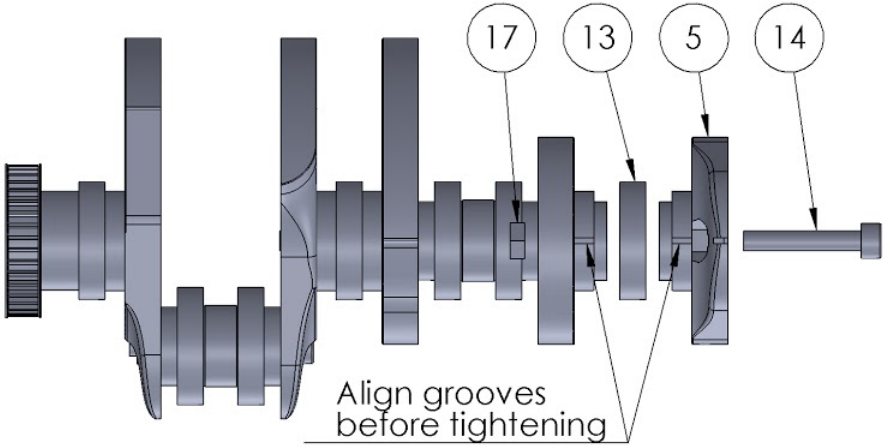
17
13
5
14
Align grooves
before tightening

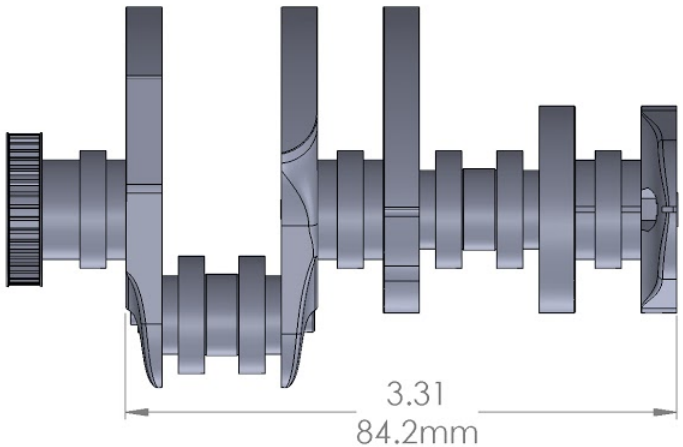
3.31
84.2mm

Step 6

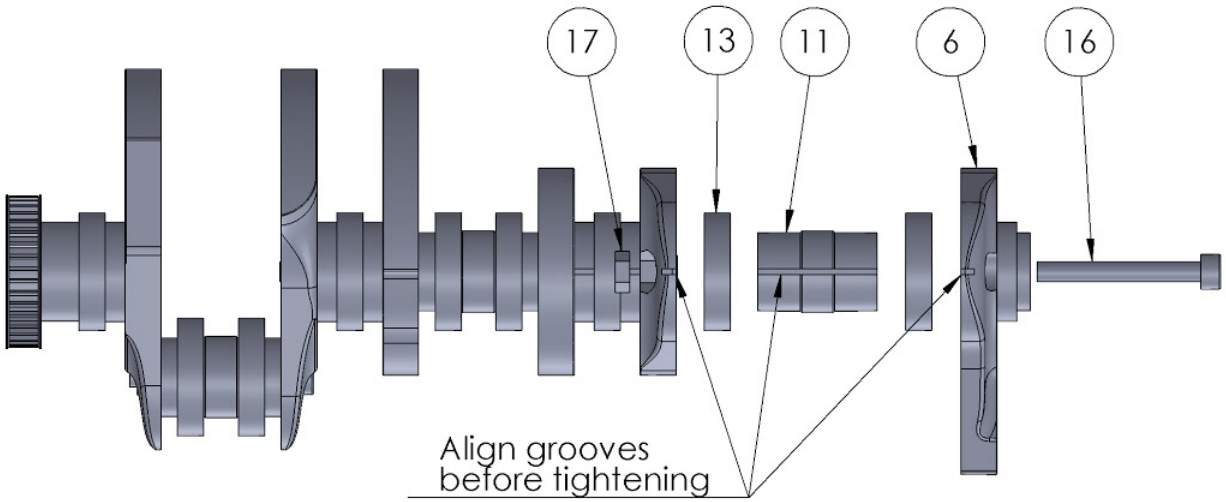

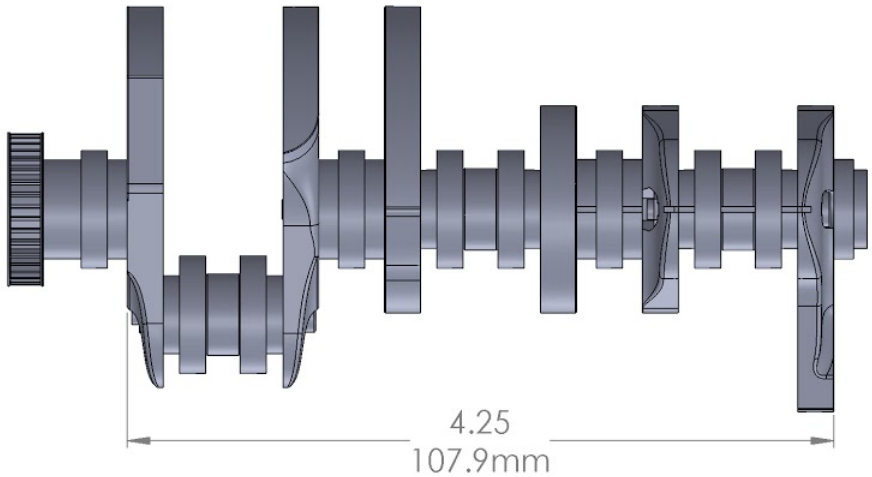

Step 7

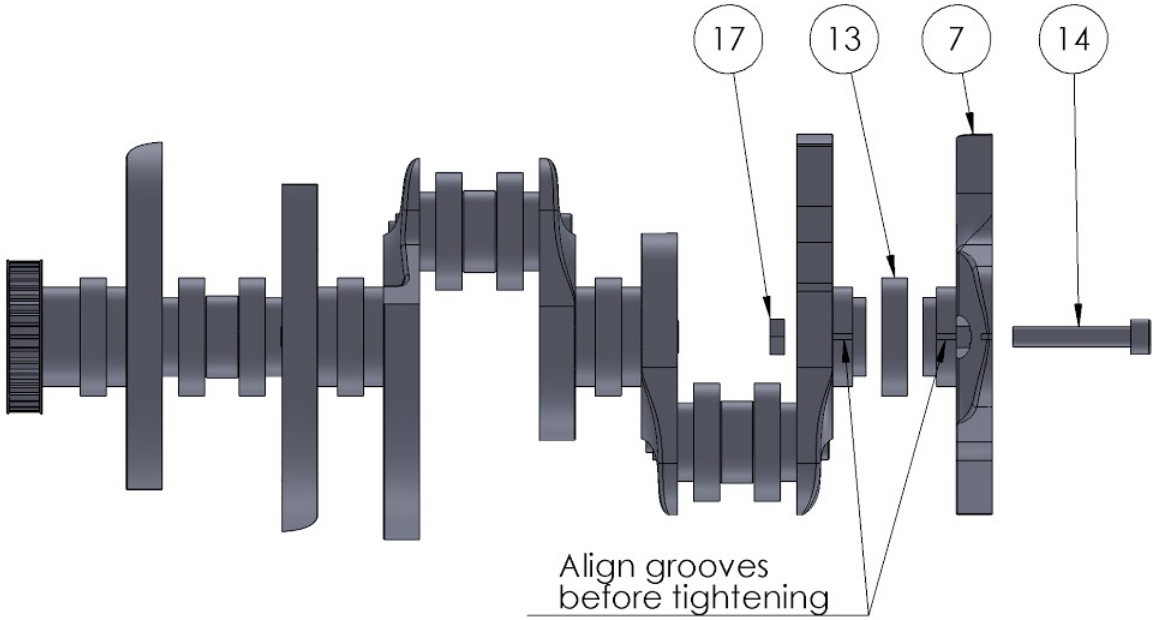

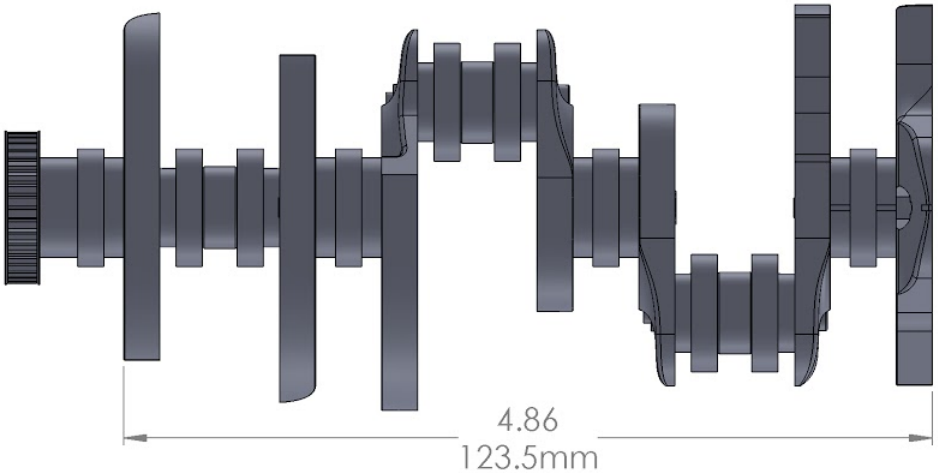

Step 8

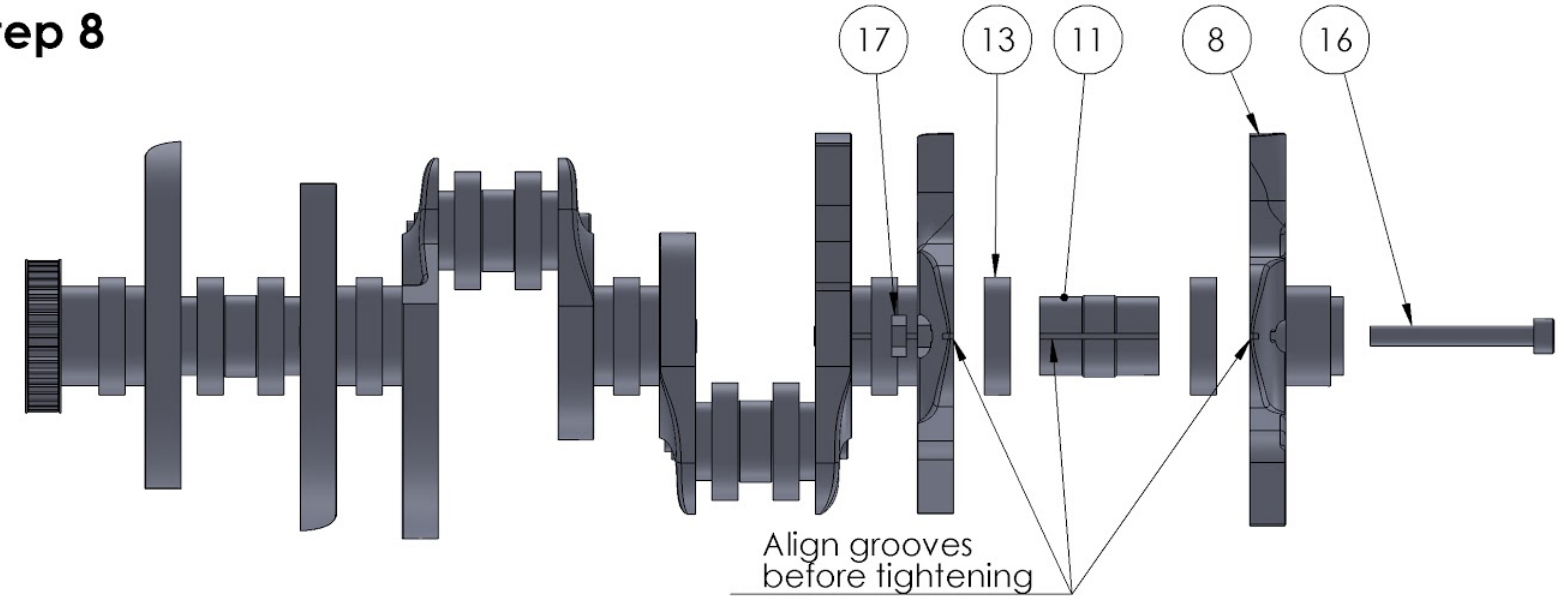

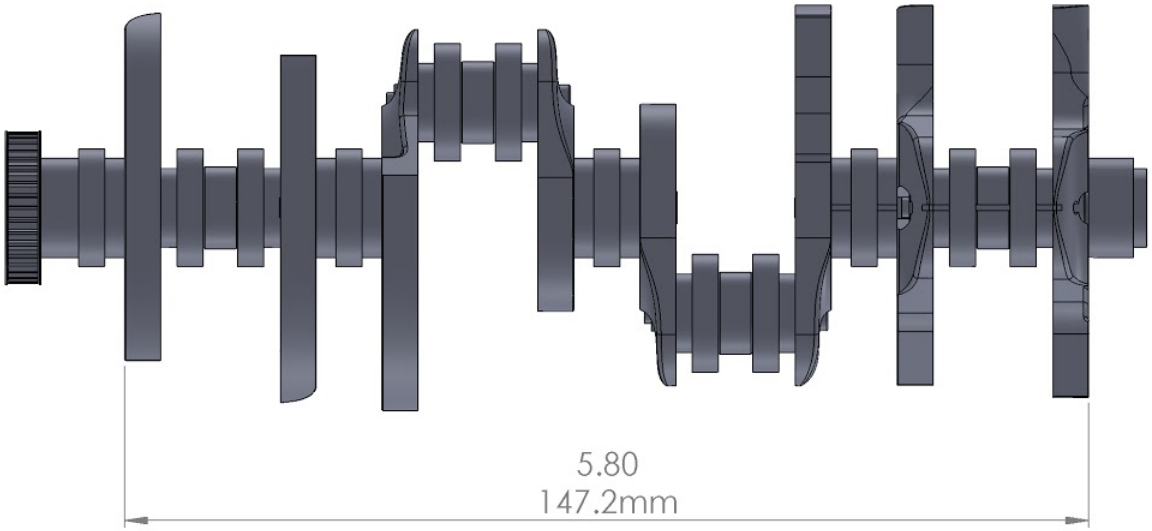

Step 9

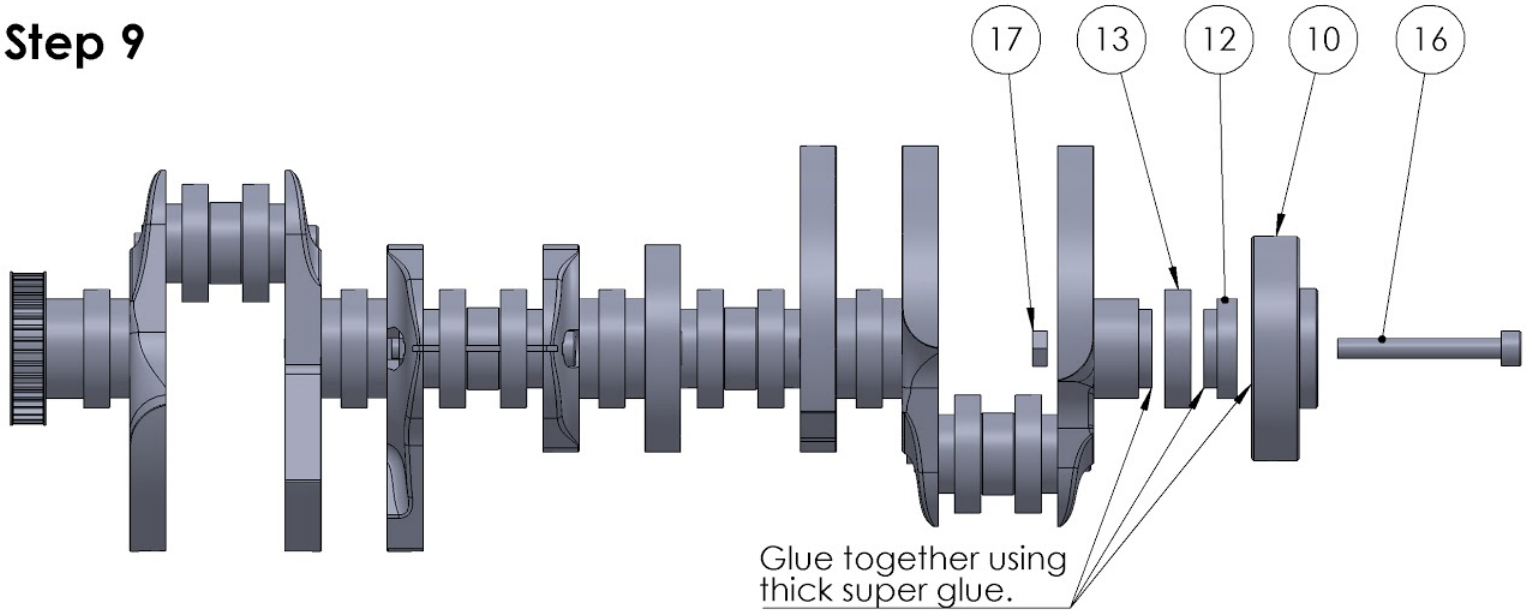

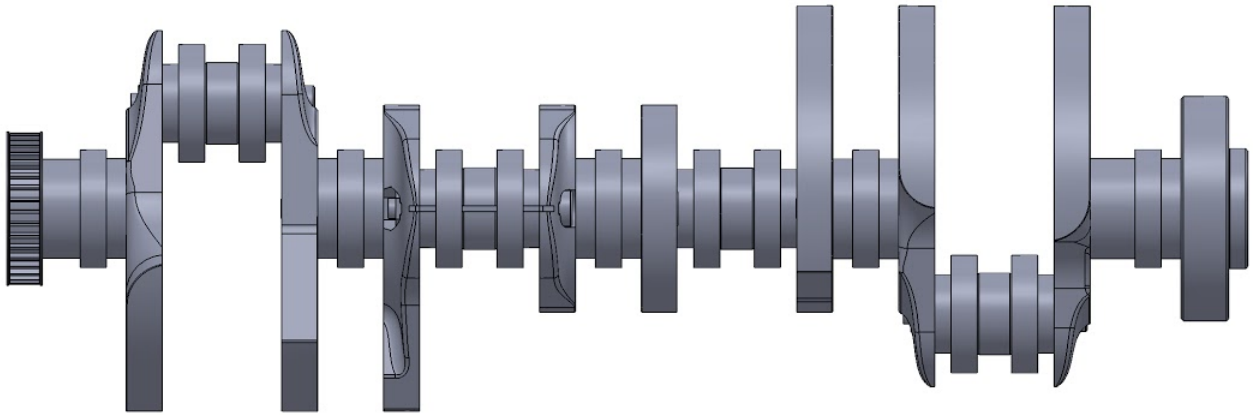

Step 10

Test fit crankshaft to engine block.
Install and completely tighten main bearing caps.
If crankshaft does not turn smoothly, recheck clocking marks on the connecting rod journals and adjust as needed.

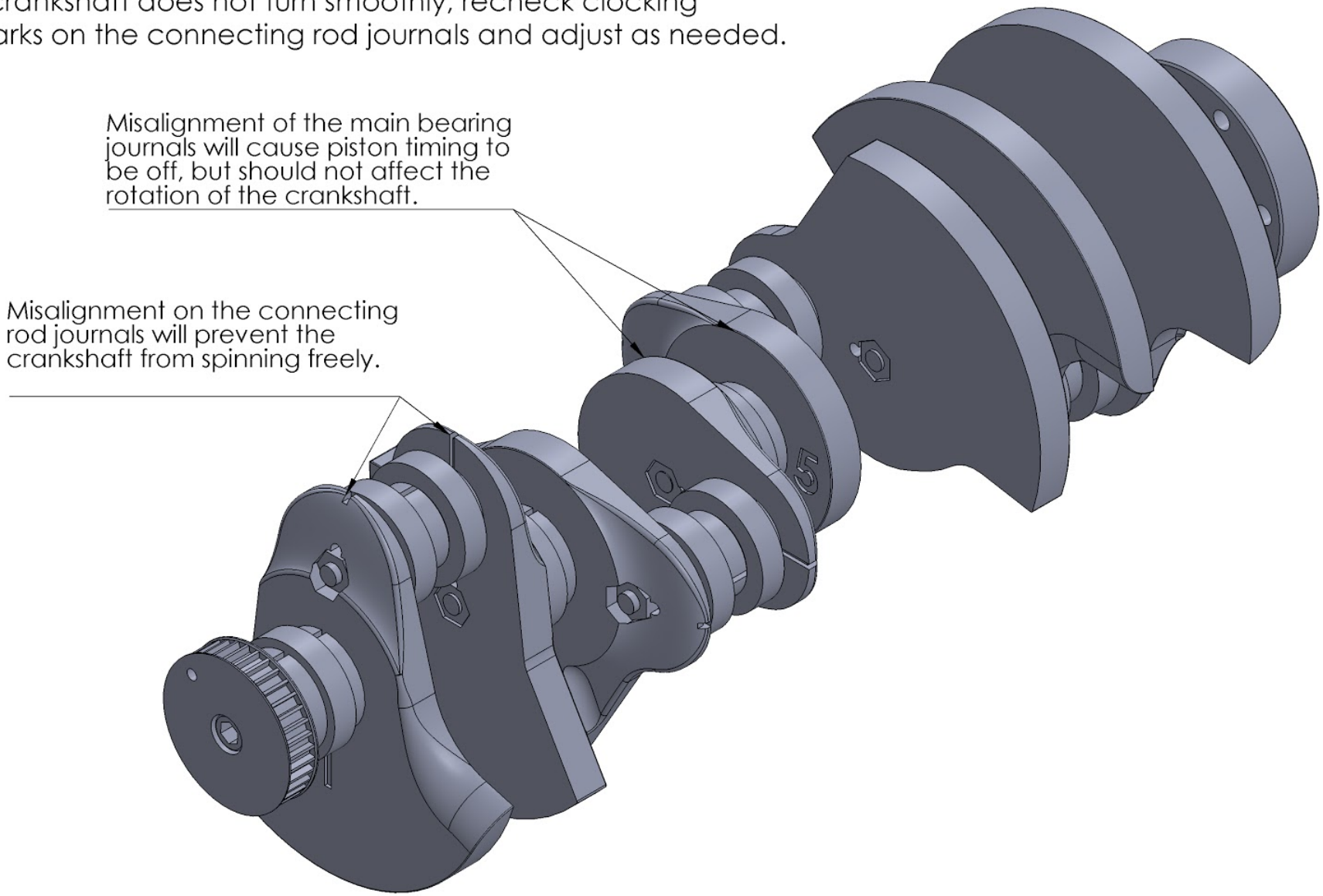

Step 11

Using extra thin super glue, glue crankshaft together.
Place a few drops into each hole. The extra thin super glue should wick in between the mating surfaces.
Do one hole a time and give plenty of time for glue to cure.
The glue will take longer to cure between the matching surfaces.
There are a total of 14 holes where super glue needs to be applied

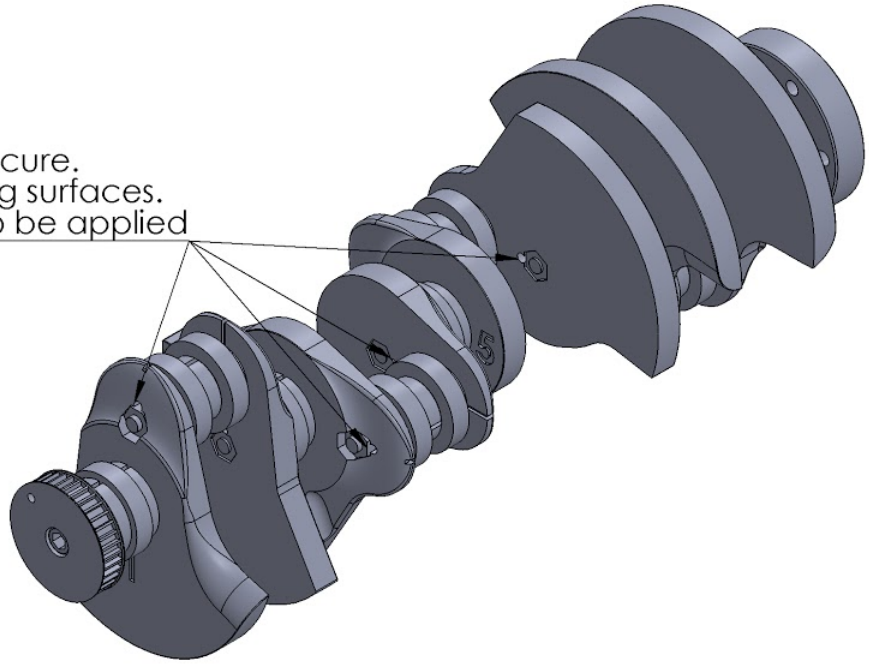

Check that no super glue is on the bearings and that the all rotate smoothly.
Use a super glue de-bonder if needed.

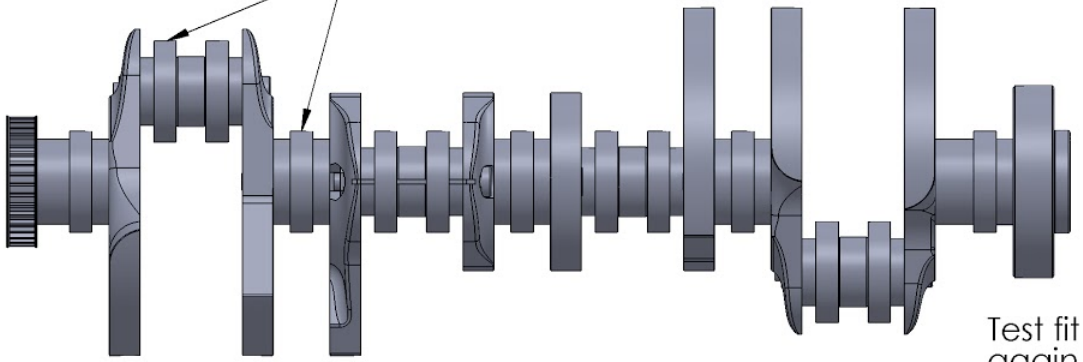

Test fit the crank into the block again and install main bearing caps.

Install Crankshaft Assembly

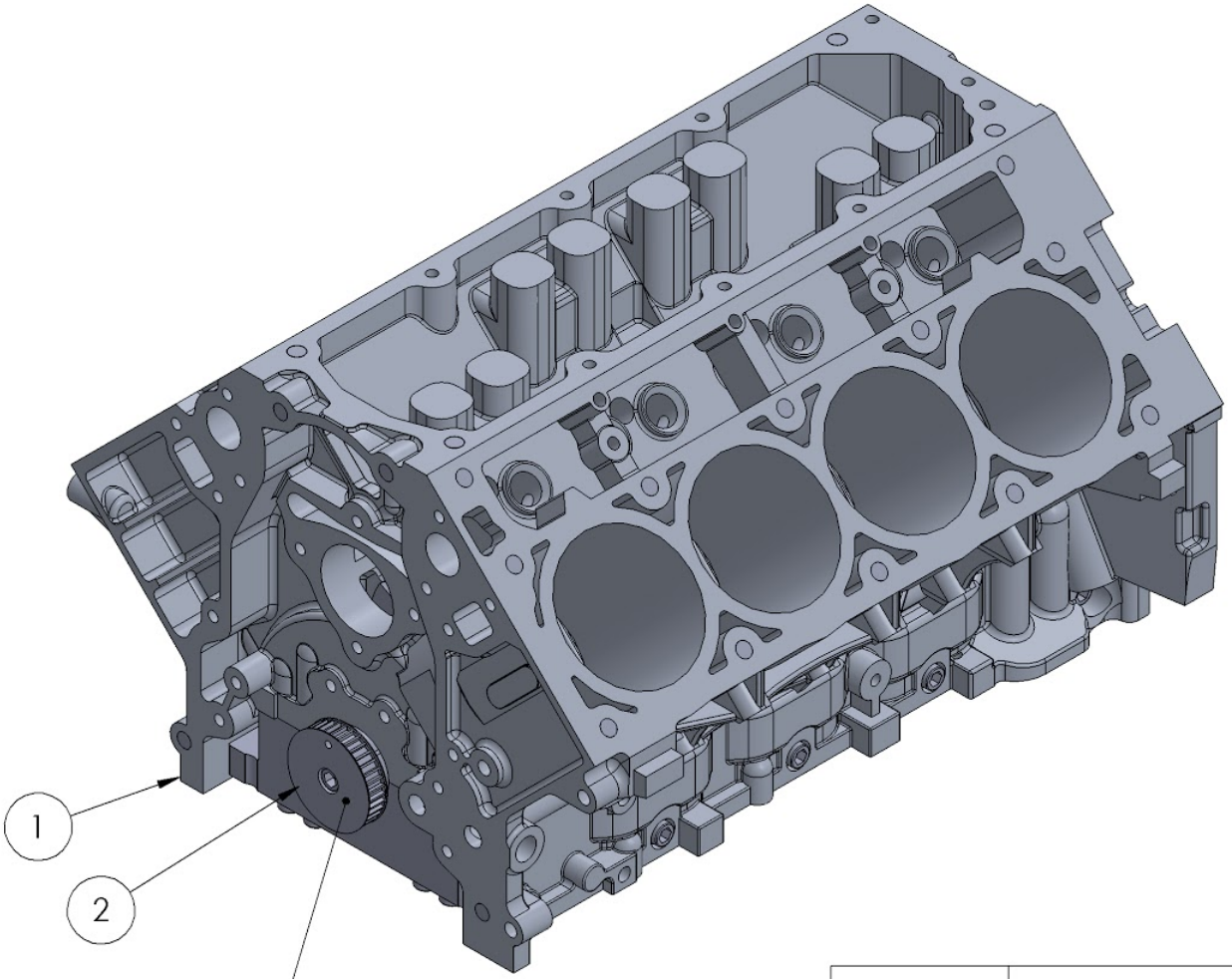

Surface of crank gear should sit
~ 8.5mm from block/bearing cap

ITEM NO.	PART NUMBER	QTY.
1	Engine Block Bearing Caps Assembly	1
2	Crankshaft Assembly	1

Camshaft Assembly

ITEM NO.	PART NUMBER	Default/ QTY.
1	Camshaft Lobe 1	1
2	Camshaft Lobe 2	1
3	Camshaft Lobe 3	1
4	Camshaft Lobe 4	1
5	Camshaft Lobe 5	1
6	Camshaft Lobe 6	1
7	Camshaft Lobe 7	1
8	Camshaft Lobe 8	1
9	Camshaft Lobe 9	1
10	Camshaft Lobe 10	1
11	Camshaft Lobe 11	1
12	Camshaft Lobe 12	1
13	Camshaft Lobe 13	1
14	Camshaft Lobe 14	1
15	Camshaft Lobe 15	1
16	Camshaft Lobe 16	1
17	Cam Gear	1
18	Cam Bearing Surface 1	4
19	Cam Bearing Surface 2	1
20	Cam Bearing Surface 3	5
21	6702zz Bearing	5
22	M3 x 175mm Threaded Rod	1
23	m3 nut	11
24	M3 8mm Set Screw	1

Step 1

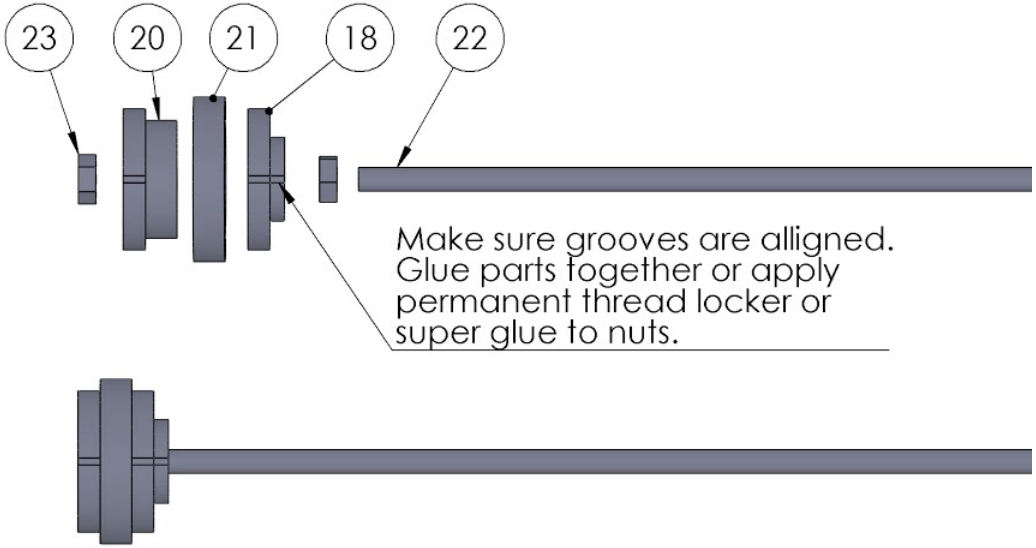

Step 2

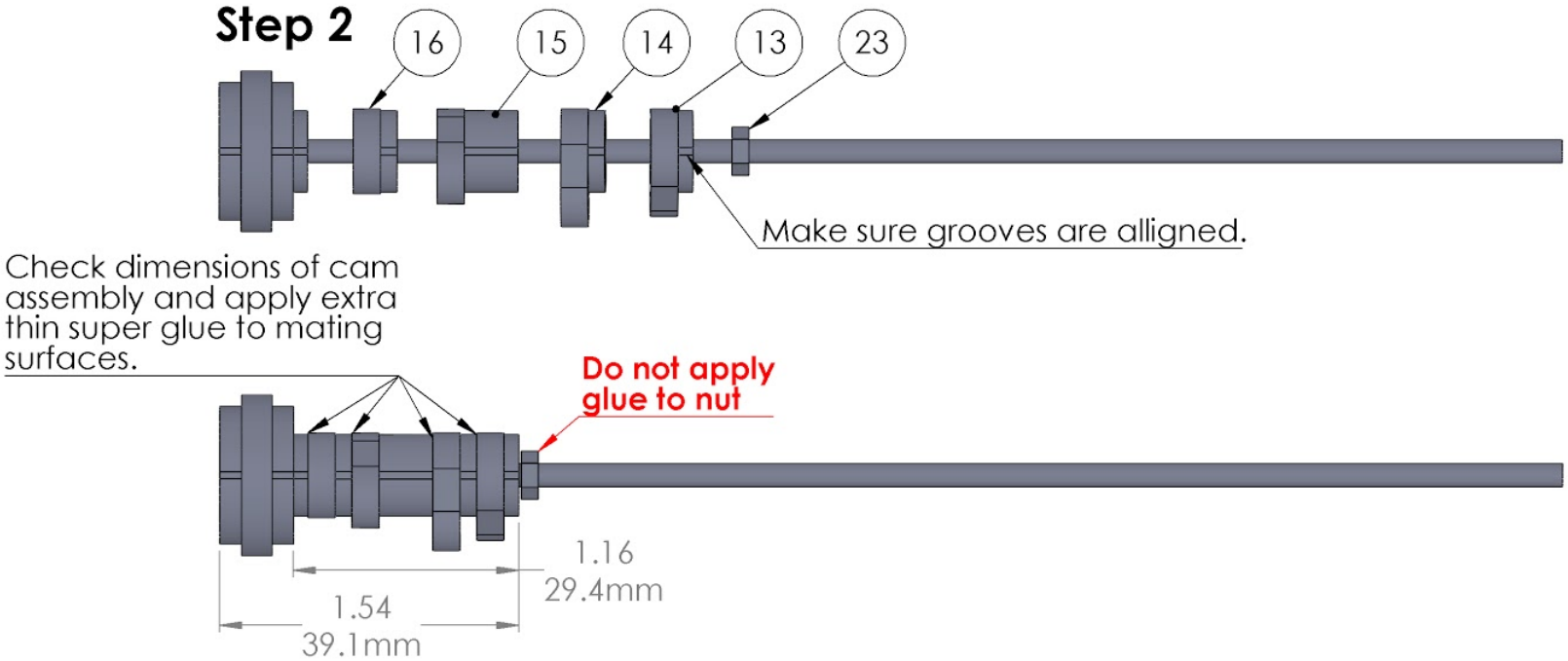
16
15
14
13
23
Make sure grooves are alligned.
Check dimensions of cam assembly and apply extra thin super glue to mating surfaces.
Do not apply glue to nut
1.16
29.4mm
1.54
39.1mm

Step 3

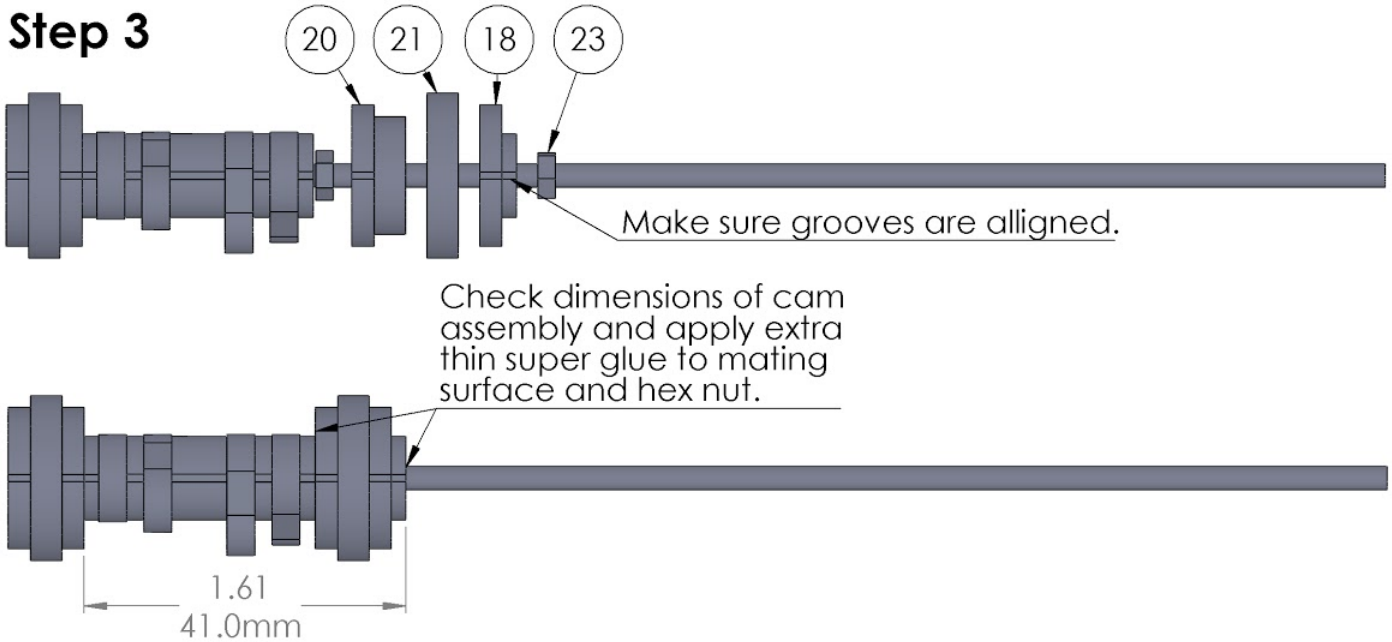
20
21
18
23
Make sure grooves are alligned.
Check dimensions of cam assembly and apply extra thin super glue to mating surface and hex nut.
1.61
41.0mm

Step 4

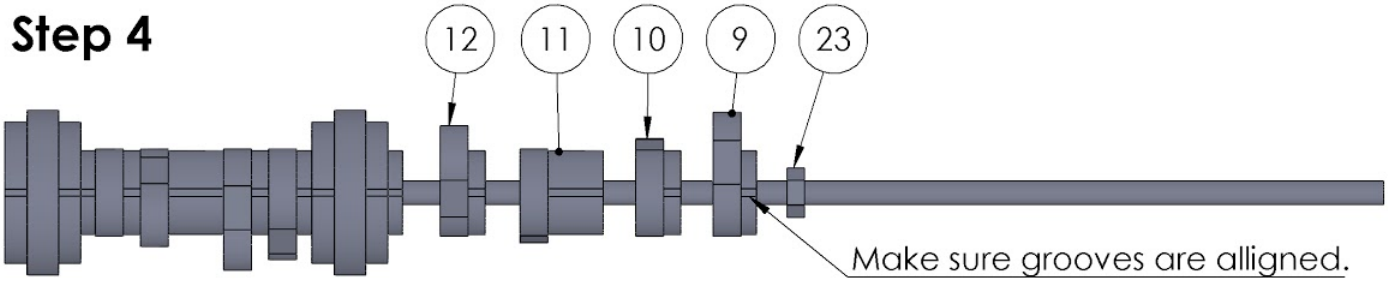
12
11
10
9
23
Make sure grooves are alligned.

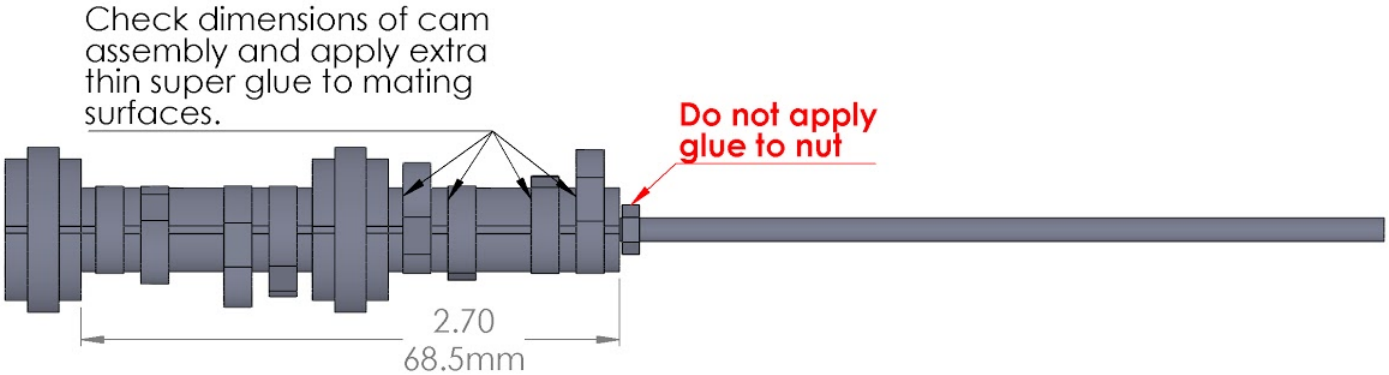
Check dimensions of cam assembly and apply extra thin super glue to mating surfaces.
Do not apply glue to nut
2.70
68.5mm

Step 5

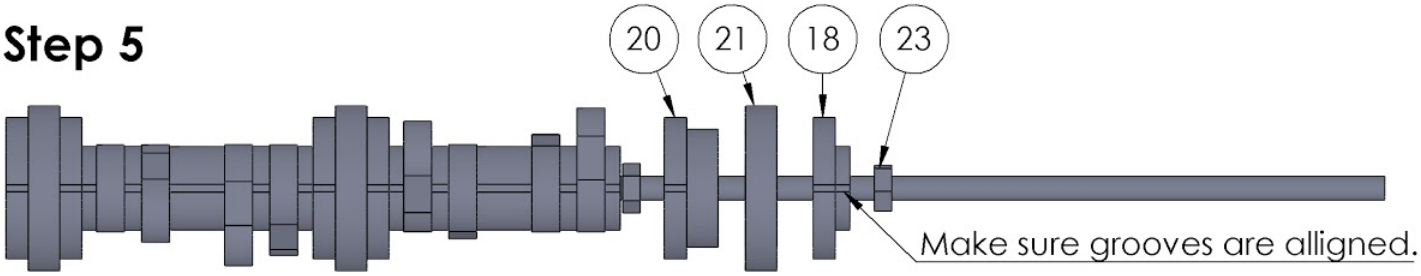
20
21
18
23
Make sure grooves are alligned.

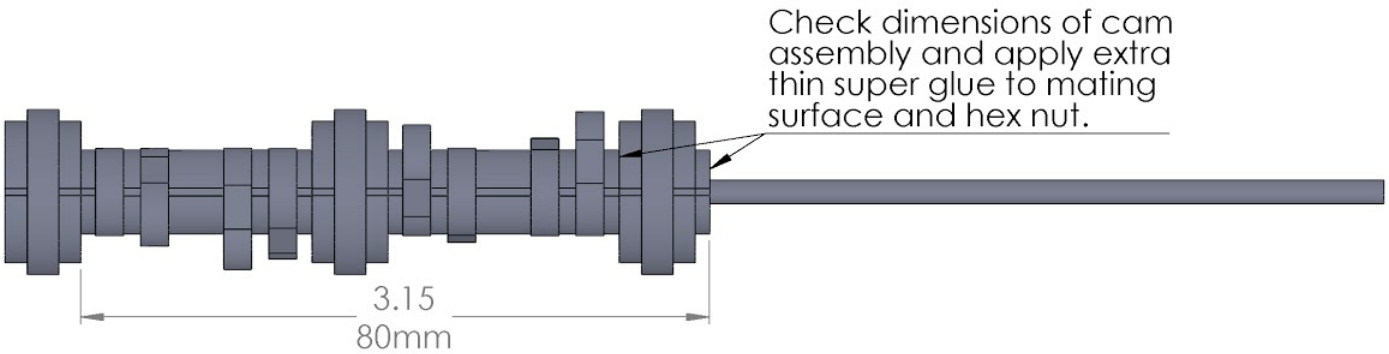
Check dimensions of cam assembly and apply extra thin super glue to mating surface and hex nut.
3.15
80mm

Step 6

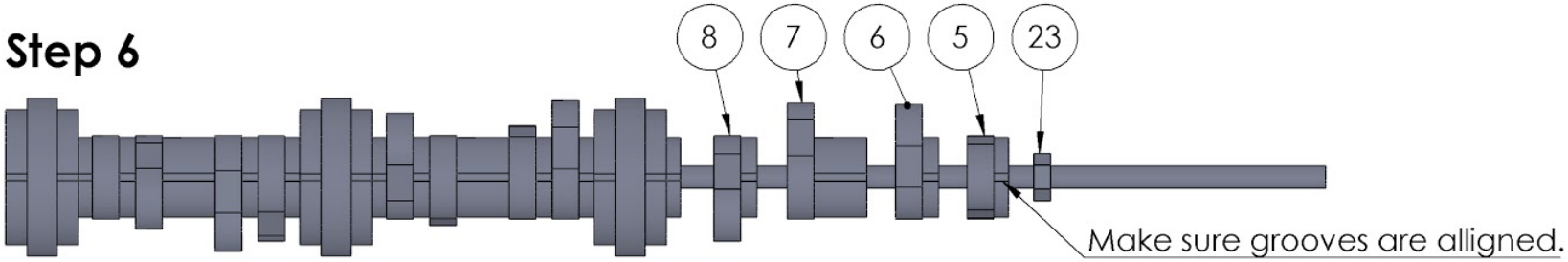
8
7
6
5
23
Make sure grooves are alligned.

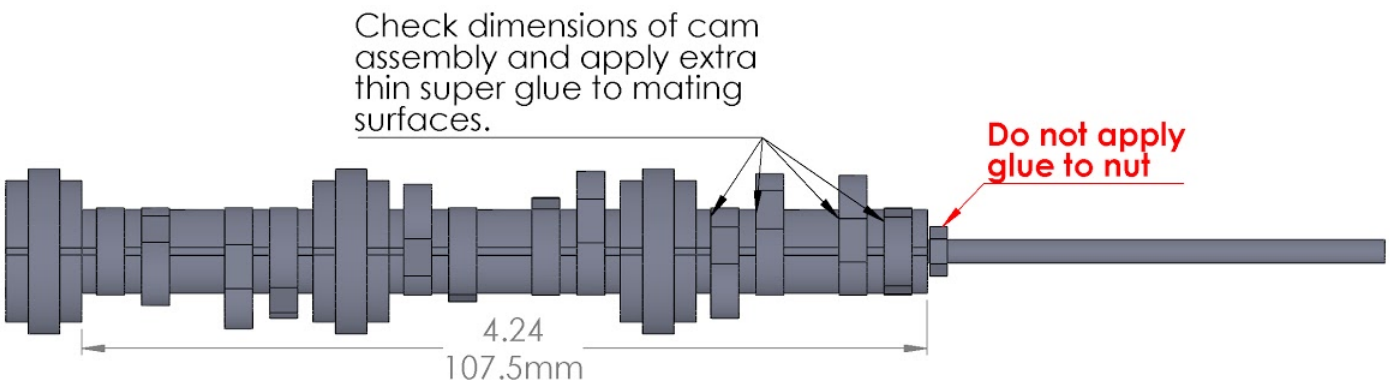
Check dimensions of cam assembly and apply extra thin super glue to mating surfaces.
Do not apply glue to nut
4.24
107.5mm

Step 7

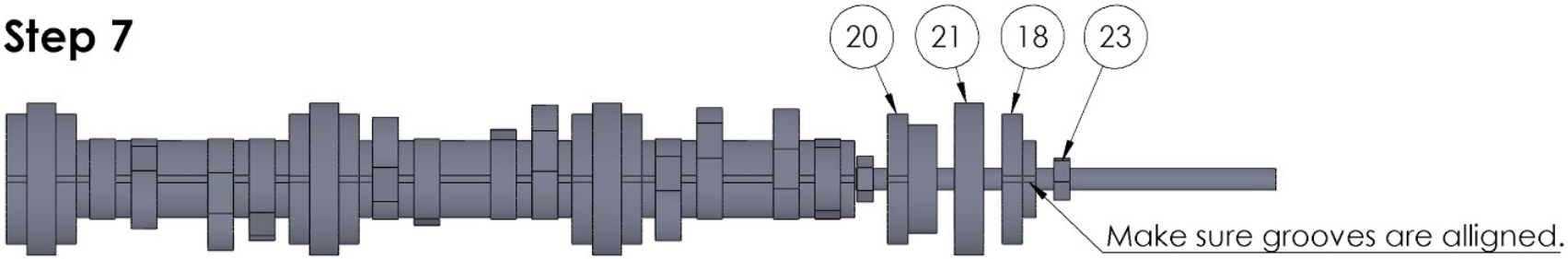
20
21
18
23
Make sure grooves are alligned.

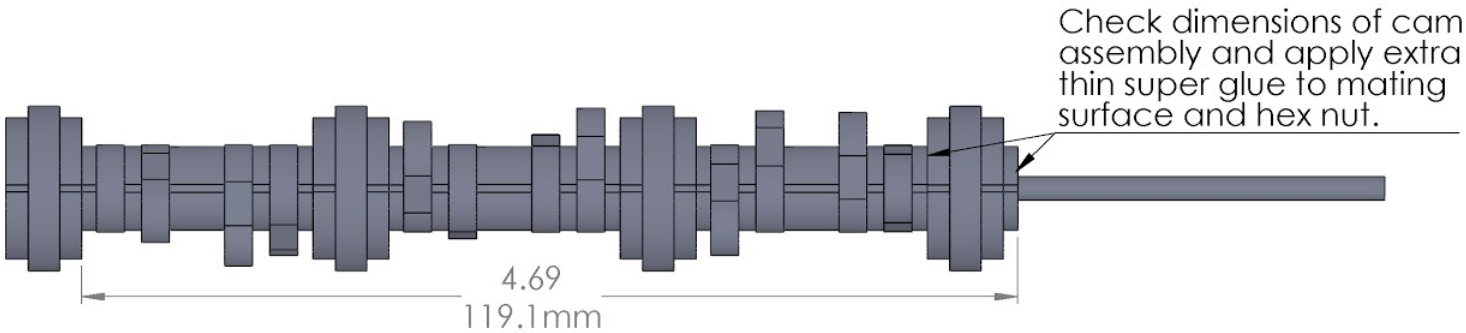
Check dimensions of cam assembly and apply extra thin super glue to mating surface and hex nut.
4.69
119.1mm

Step 8

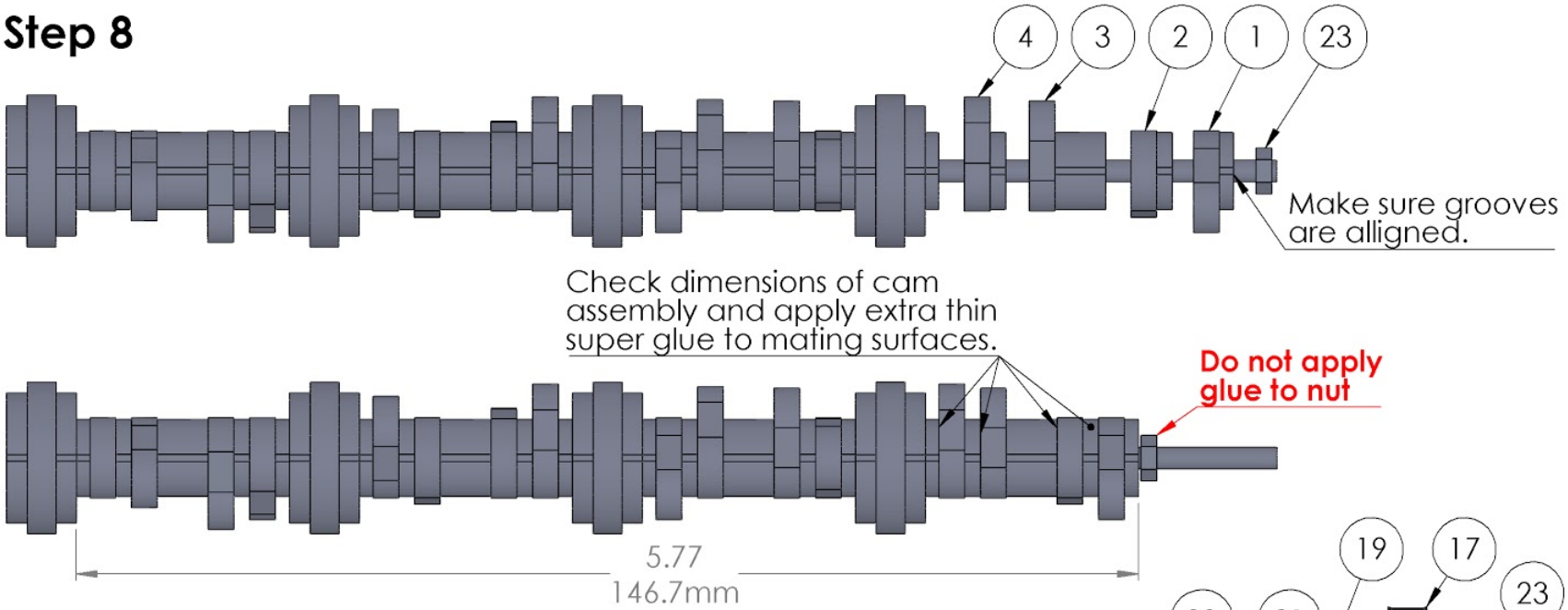
4
3
2
1
23
Make sure grooves are alligned.
Check dimensions of cam assembly and apply extra thin super glue to mating surfaces.
Do not apply glue to nut
5.77
146.7mm

Step 9

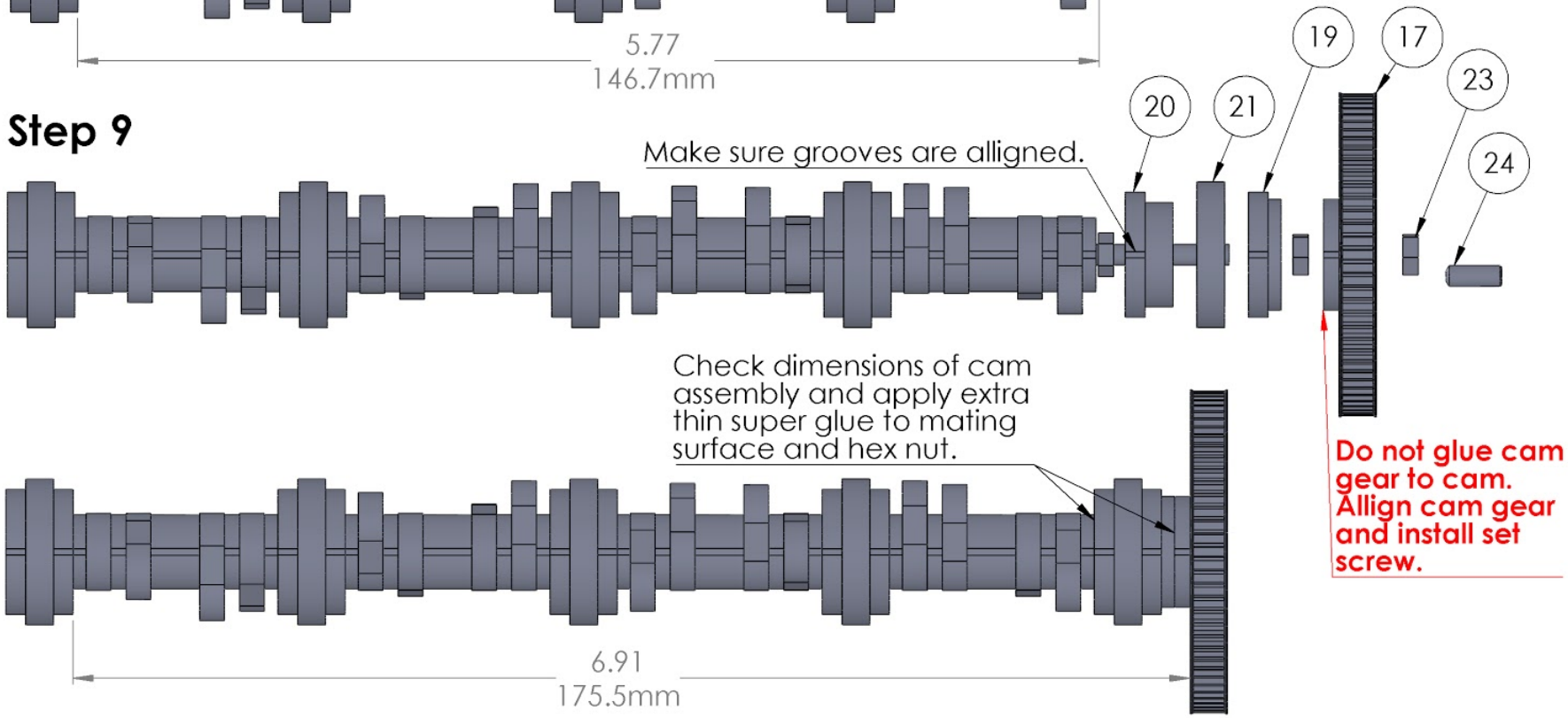
19
17
23
20
21
24
Make sure grooves are alligned.
Check dimensions of cam assembly and apply extra thin super glue to mating surface and hex nut.
Do not glue cam gear to cam. Allign cam gear and install set screw.
6.91
175.5mm

Install Camshaft Assembly

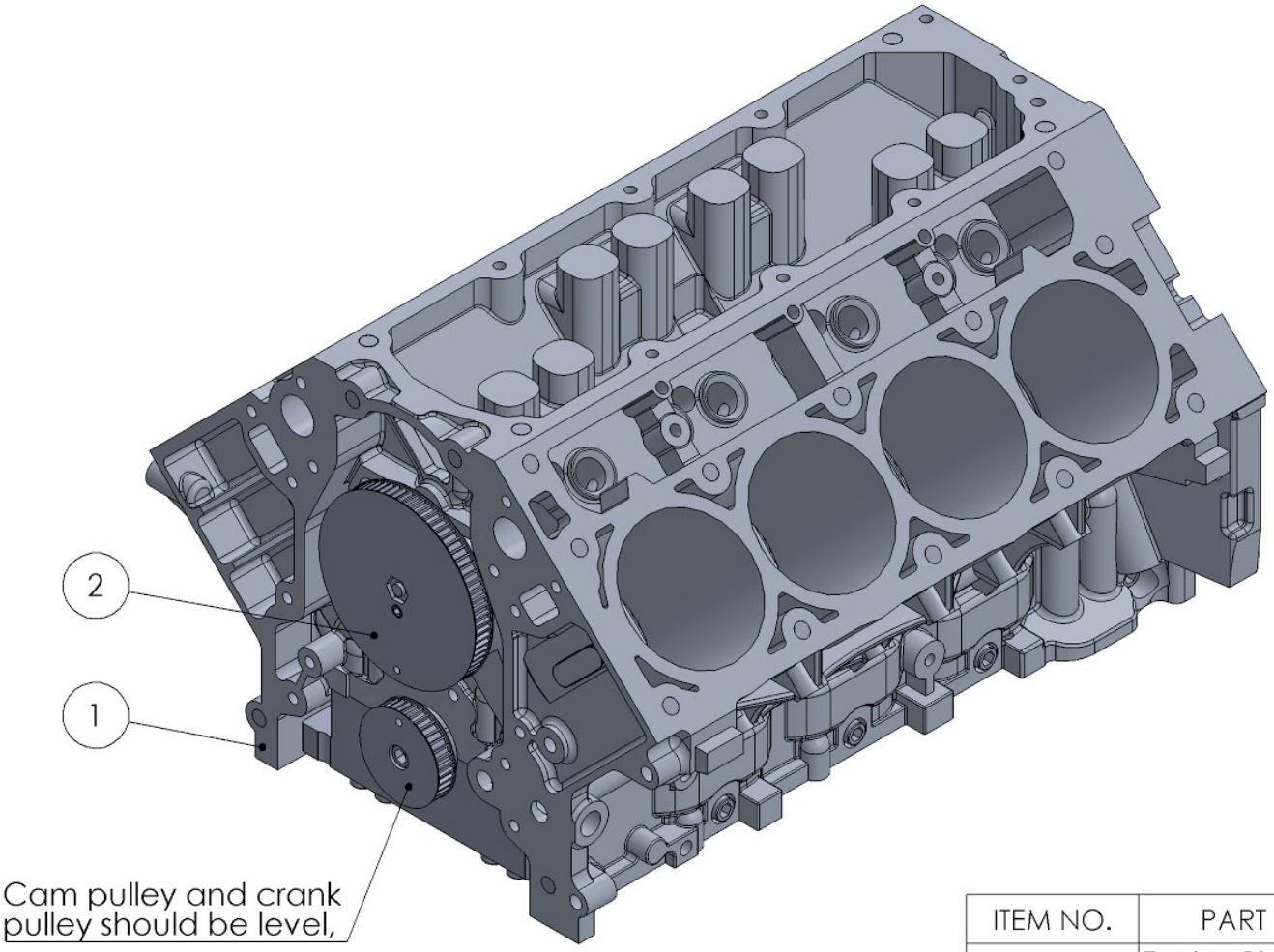

ITEM NO.	PART NUMBER	QTY.
1	Engine Block Crank Assembly	1
2	Cam Assembly	1

Piston Assembly

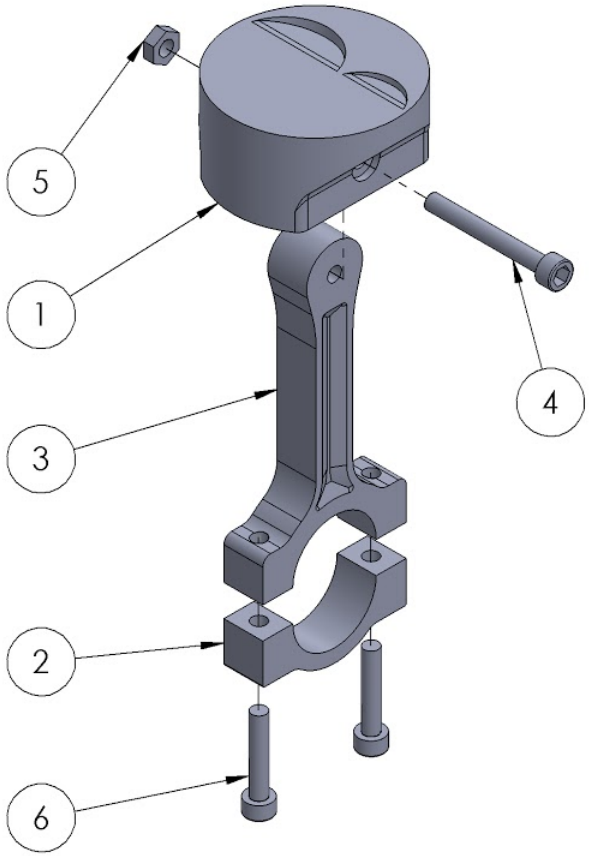

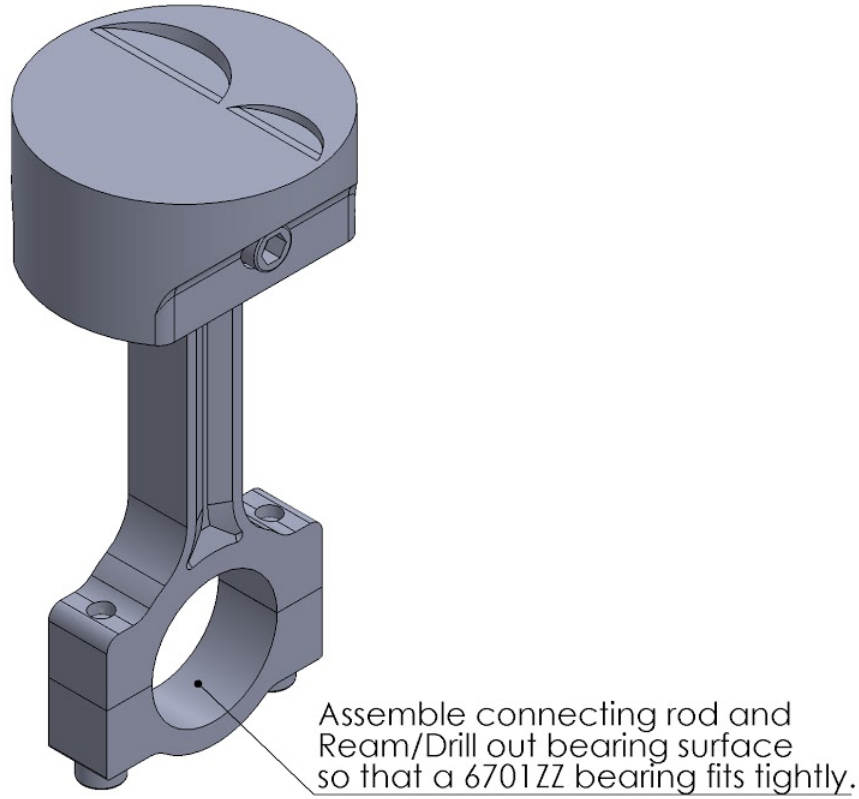

ITEM NO.	PART NUMBER	QTY.
1	Piston	1
2	Connecting Rod Bearing Cap	1
3	Connecting Rod	1
4	M3 25mm SHCS	1
5	m3 nut	1
6	m3 16mm SHCS	2

Install Piston Assemblies

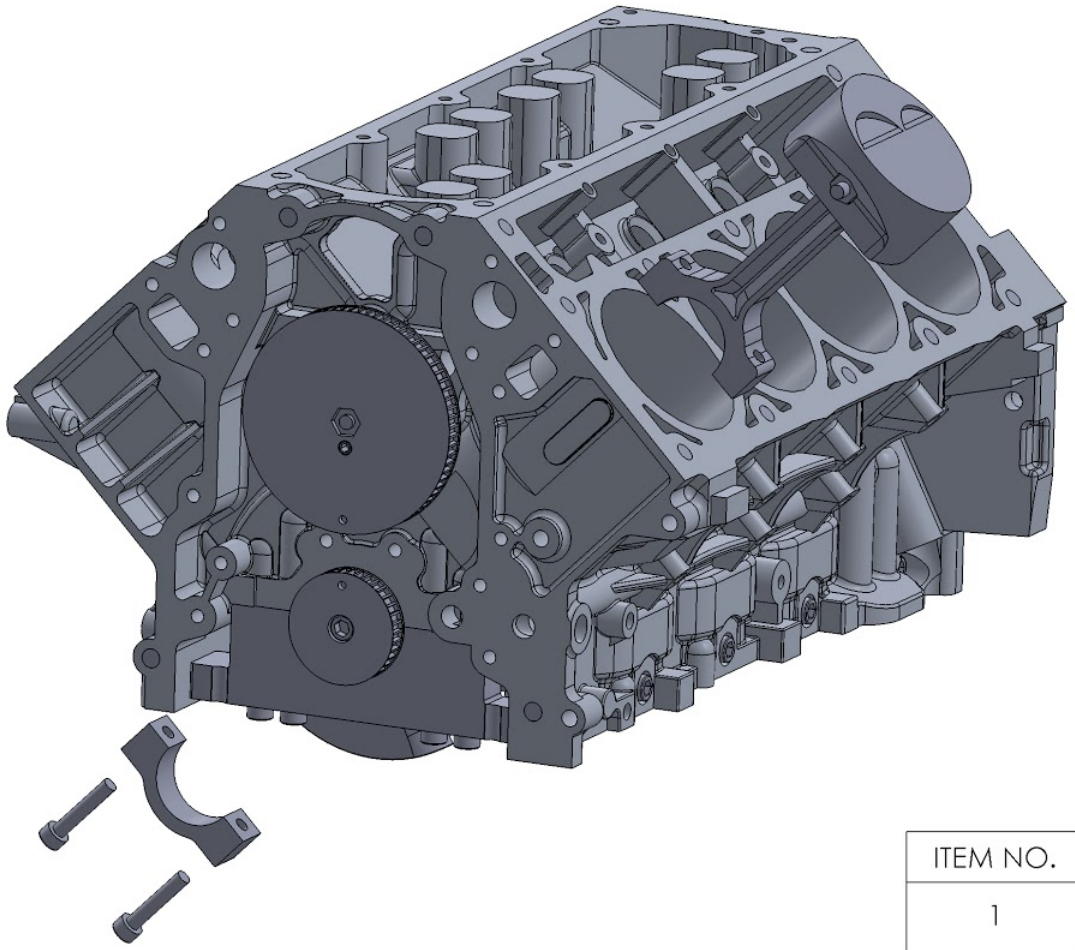

ITEM NO.	PART NUMBER	QTY.
1	Engine Block With Cam Assembly	1
2	Piston Assembly	8

Install rear main cover

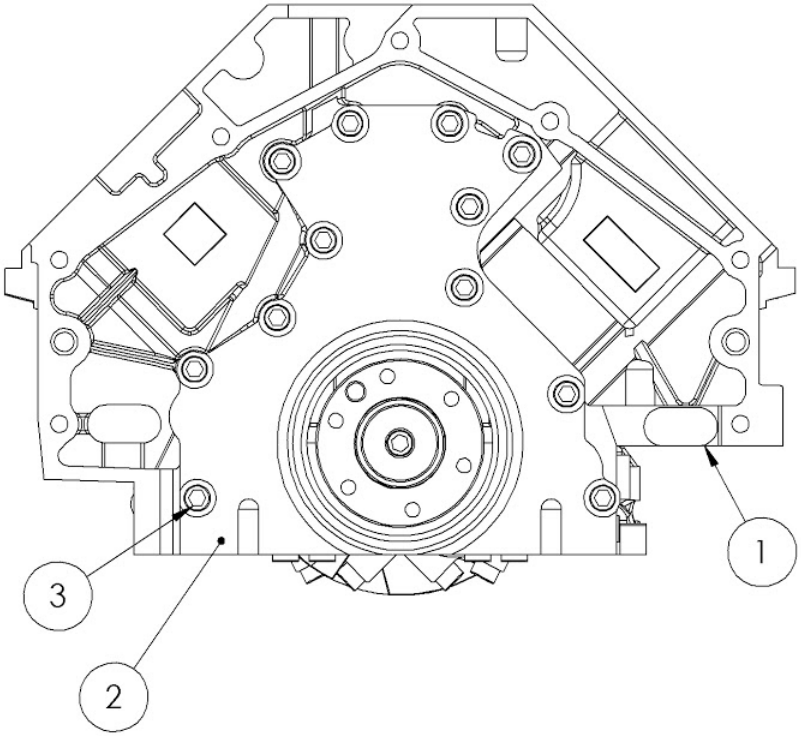

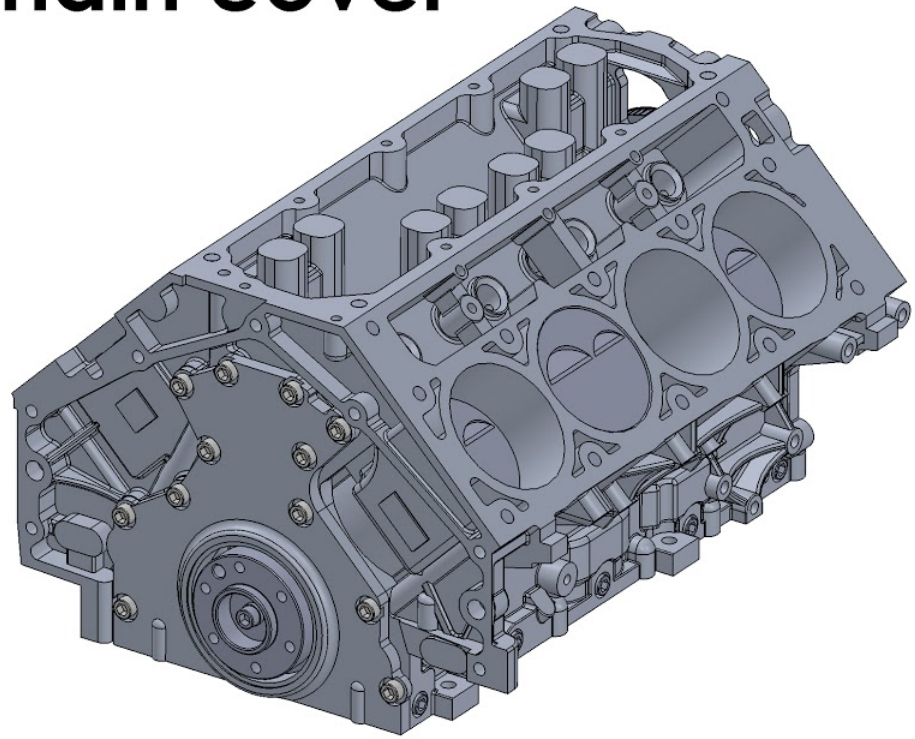

ITEM NO.	PART NUMBER	QTY.
1	Engine Block With Pistons Assembly	1
2	Rear Main Cover	1
3	M3 x 8mm SHCS	12

Install Flywheel

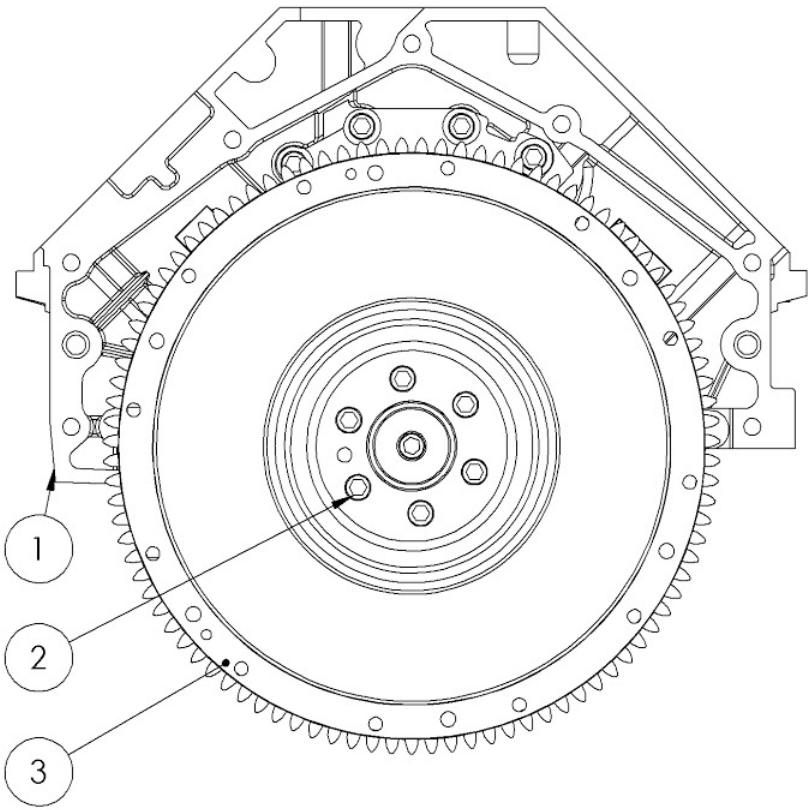

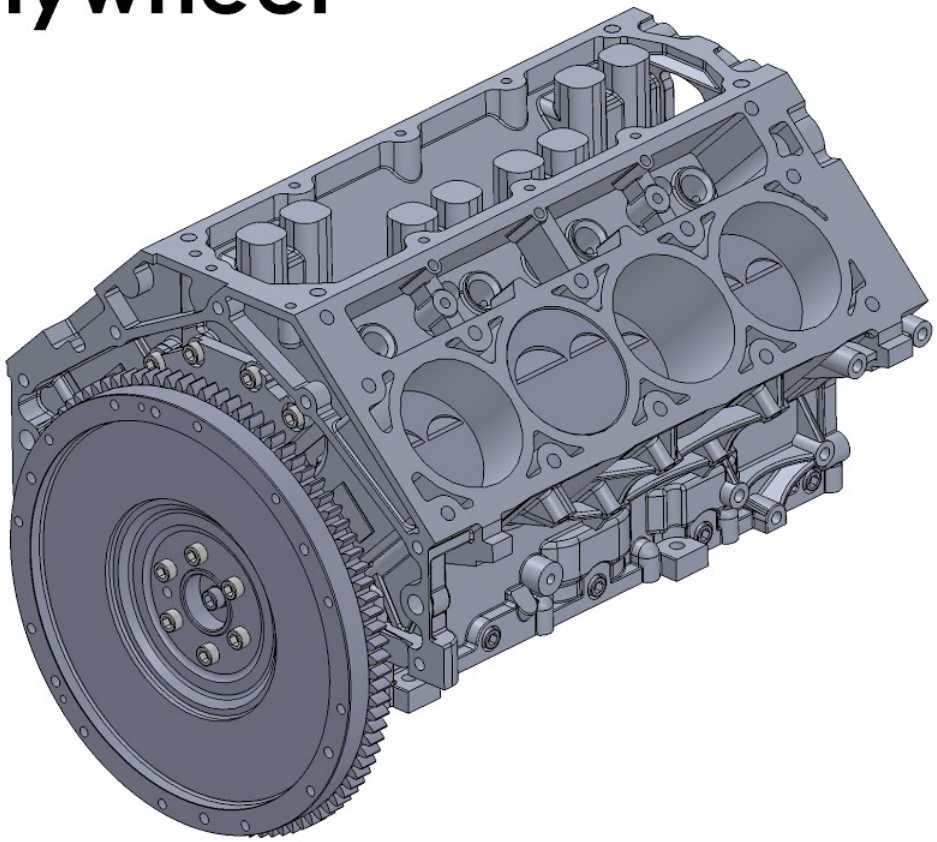

ITEM NO.	PART NUMBER	QTY.
1	Engine Block Rear Main Assembly	1
2	M3 x 8mm SHCS	6
3	Flywheel	1

Install timing belt and tensioner

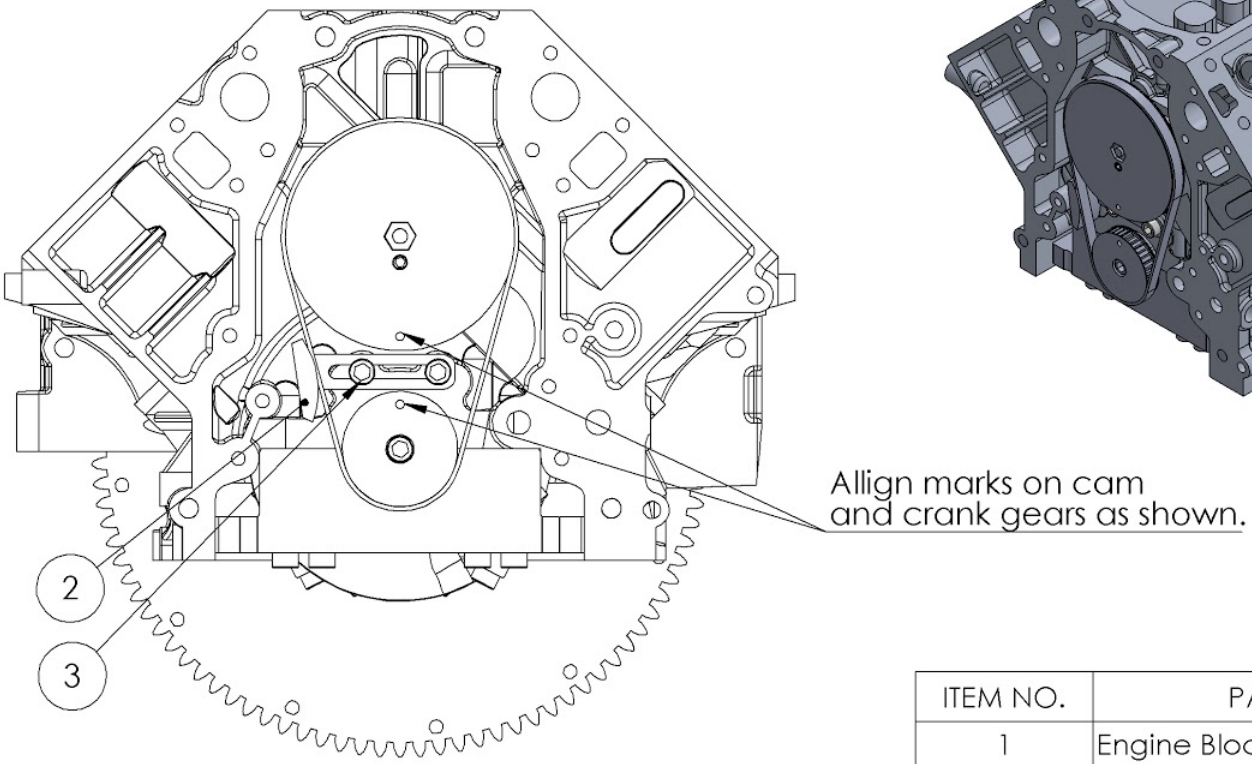

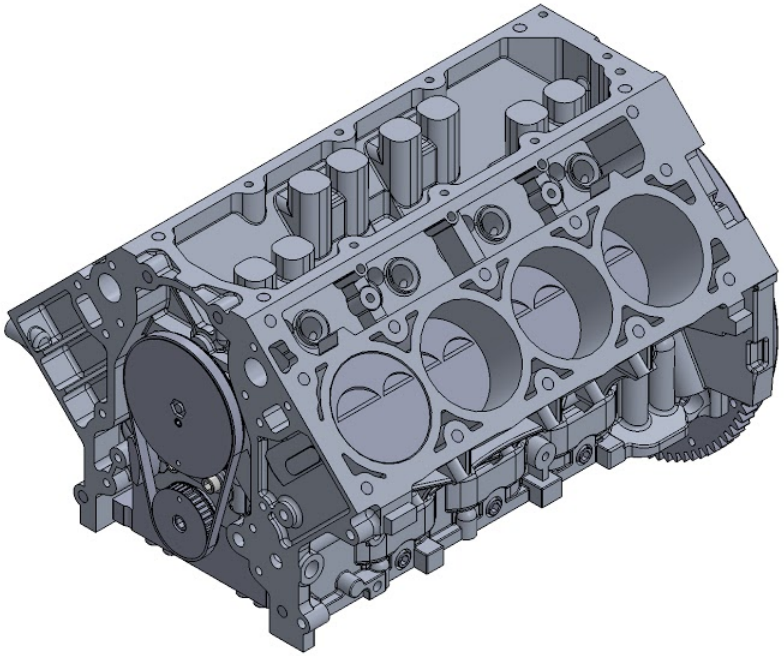

ITEM NO.	PART NUMBER	QTY.
1	Engine Block Flywheel Assembly	1
2	Timing Chain Tensioner	1
3	M3 x 8mm SHCS	2
4	GT2 100T Timing Belt	1

Valve Lifter Assembly (16x)

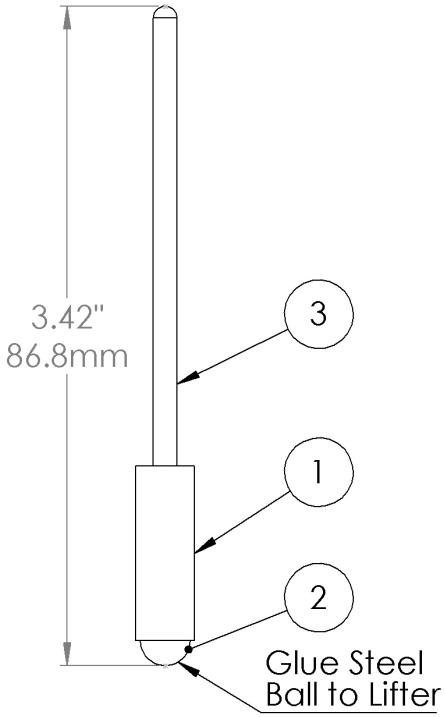

If assembled length is too long or short, scale lifter in the Z axis and reprint.

ITEM NO.	PART NUMBER	QTY.
1	Lifter	1
2	.25 Steel Ball Bearing	1
3	Push Rod	1

Valve Assembly

Intake (8x)
Exhuast (8x)

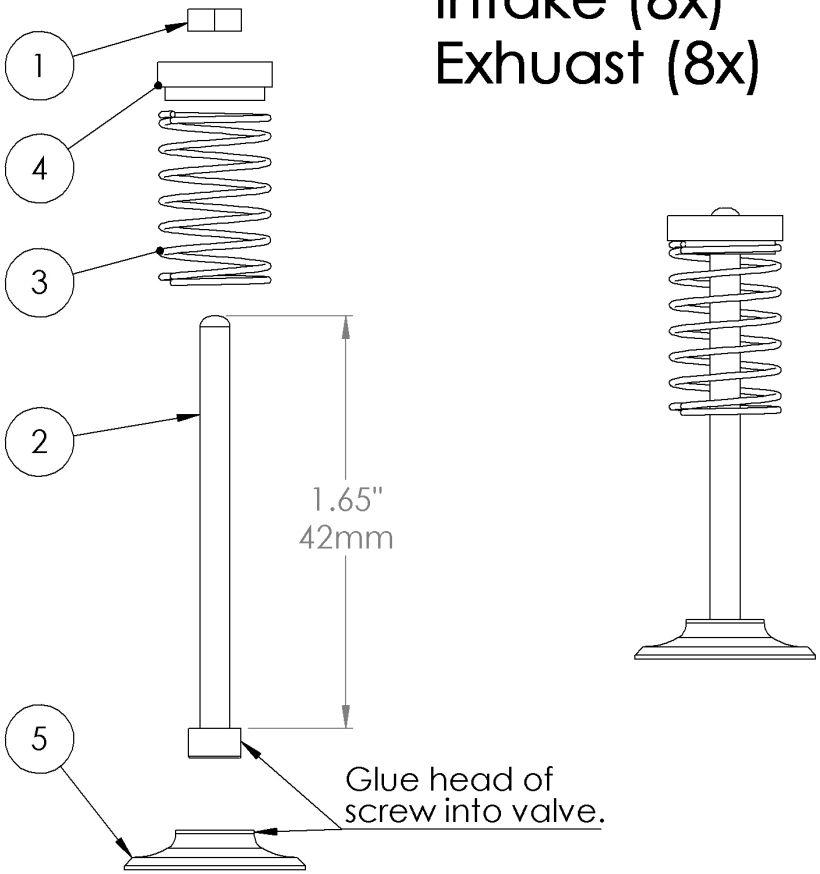

ITEM NO.	PART NUMBER	QTY.
1	m3 nut	1
2	M3 42mm SHCS (cut down from M3 x 50mm SHCS)	1
3	Valve Spring	1
4	Spring Retainer	1
5	Intake Valve	1

Install lifter assemblies

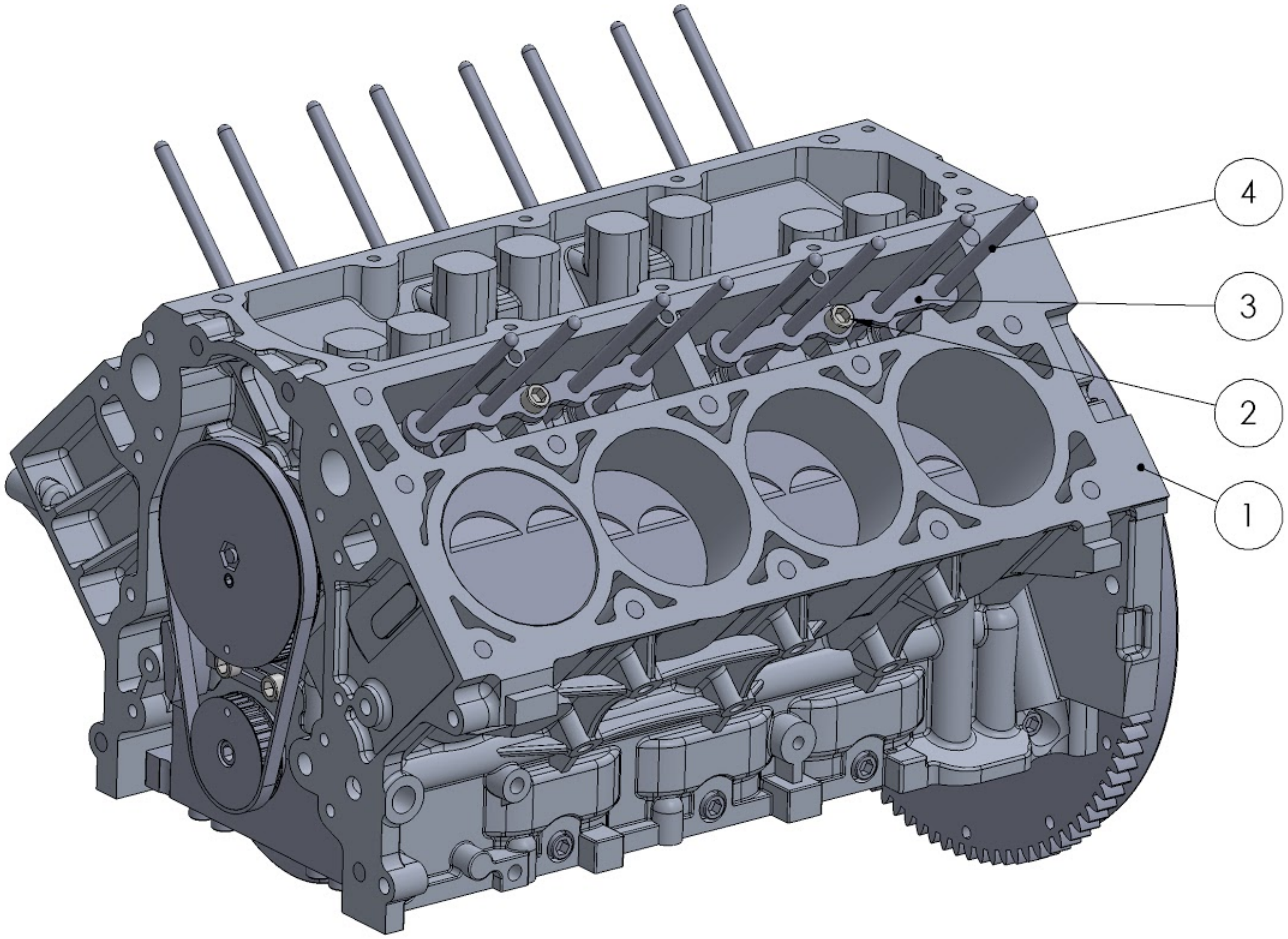

ITEM NO.	PART NUMBER	QTY.
1	Engine Block Timing Tensioner Assembly	1
2	M3 x 8mm SHCS	4
3	Lifter Guide	4
4	Lifter Assembly	16

Install Valve Assemblies

ITEM NO.	PART NUMBER	QTY.
1	Cylinder Head Insert and Magnet Assembly	1
2	Intake Valve Assembly	3
3	Exhuast valve assembly	4
4	m3 nut	1
5	M3 42mm SHCS (cut down from M3 x 50mm SHCS)	1
6	Intake Valve	1
7	Spring Retainer	1
8	Valve Spring	1

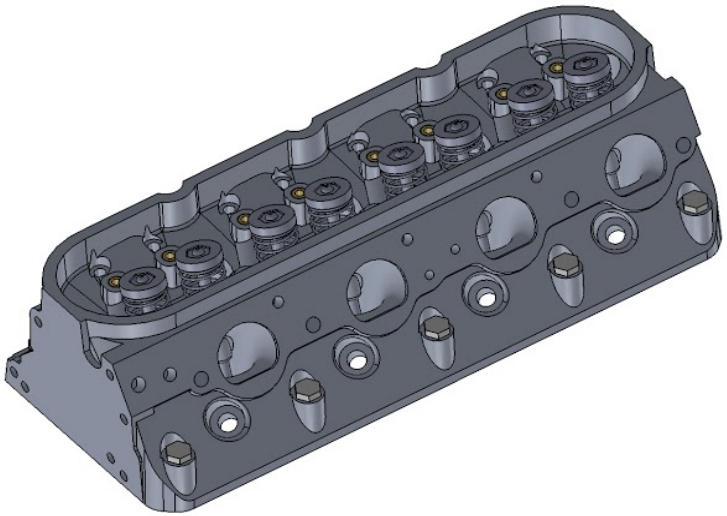

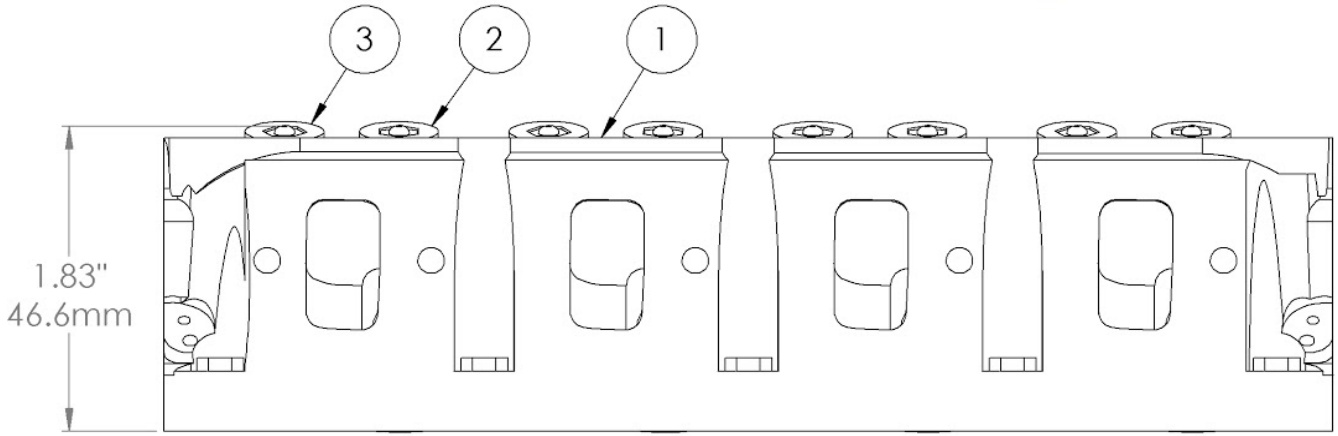

If the distance from the bottom of the cylinder head to the top of the valve stem is less than ~46.6mm, inspect valve seat to make sure the valve is closing all the way. Or recheck the over all valve length.

Install Rocker Arms

ITEM NO.	PART NUMBER	QTY.
1	Head With Valve Assembly	1
2	Rocker Rail	1
3	rocker arm pin	8
4	Rocker Arm	8
5	m3 12mm SHCS	8

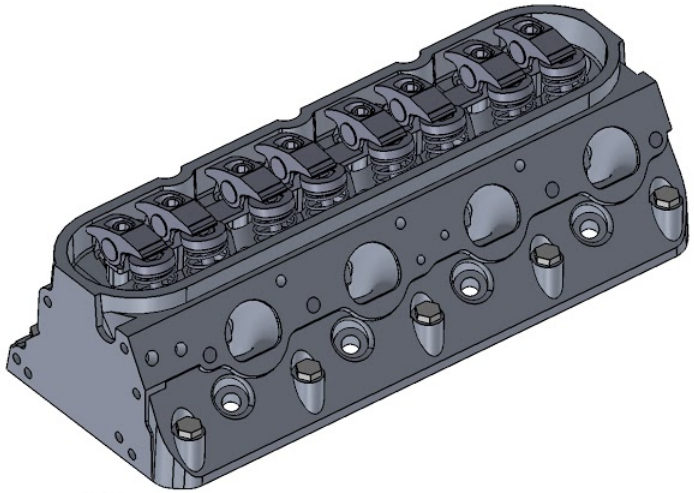

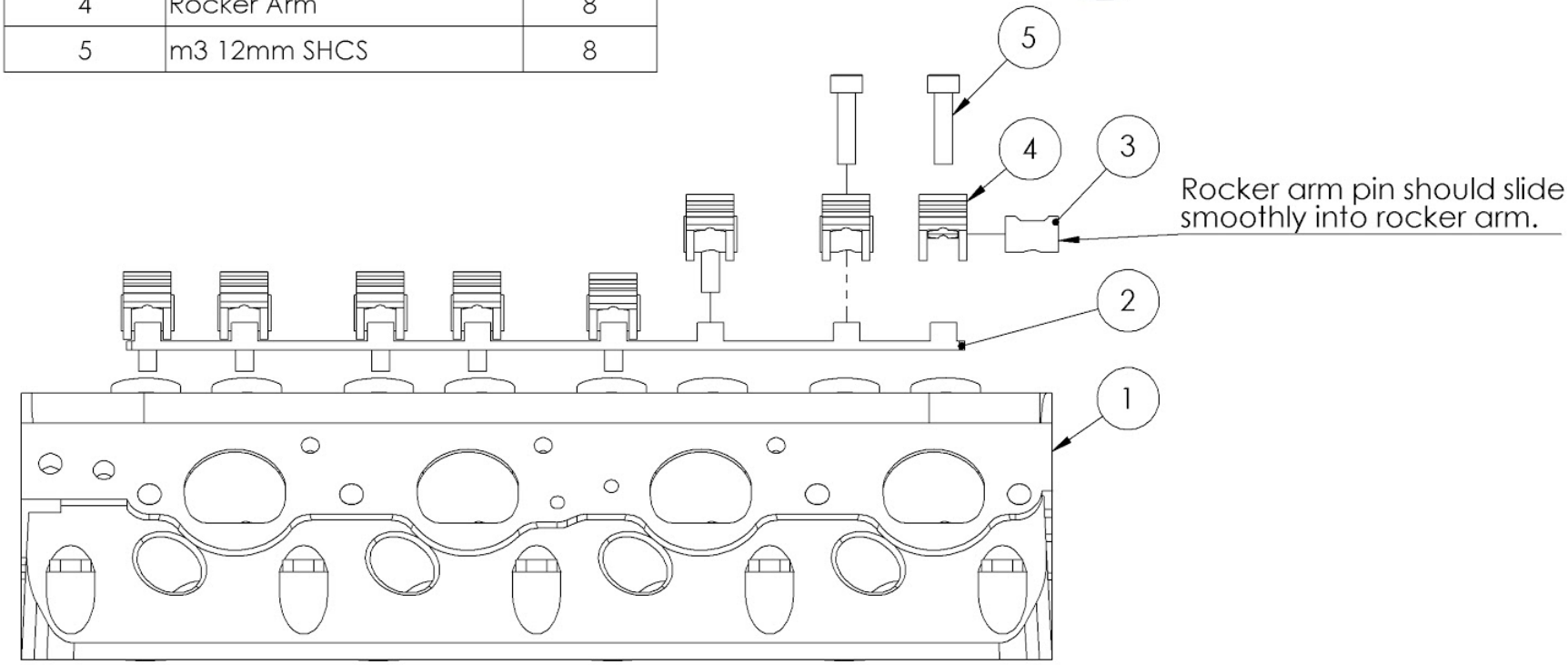

Valve Cover Assemblies

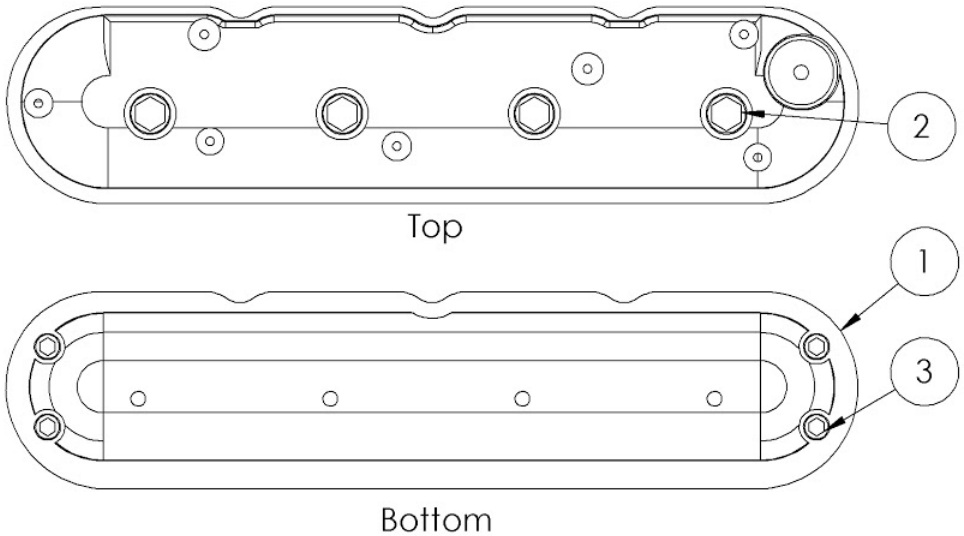

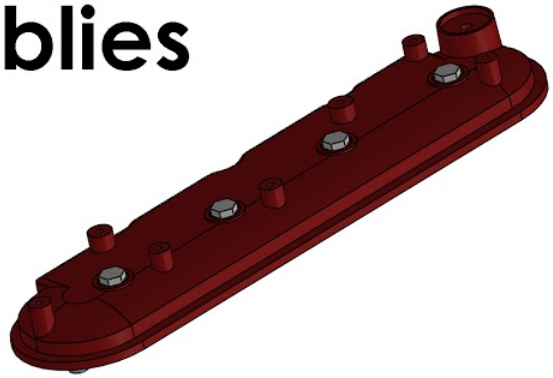

Passenger Side Valve Cover

ITEM NO.	PART NUMBER	QTY.
1	Valve Cover Passenger Side	1
2	m3 6mm Hex Screw	4
3	m3 5mm SHCS	4

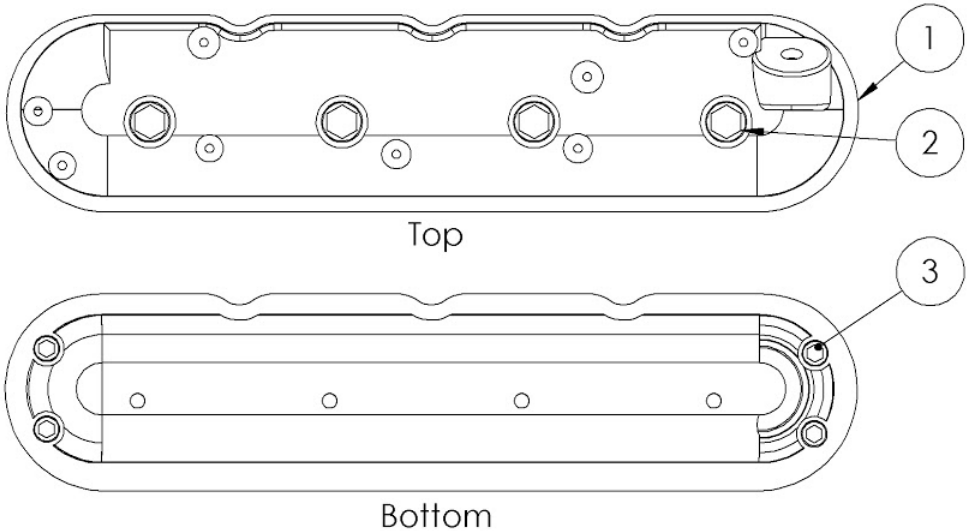

Driver Side Valve Cover

ITEM NO.	PART NUMBER	QTY.
1	Vave Cover Drivers Side	1
2	m3 6mm Hex Screw	4
3	m3 5mm SHCS	4

Install Cylinder Heads

Install cylinder heads and rotate crankshaft.
Check for any interferance.

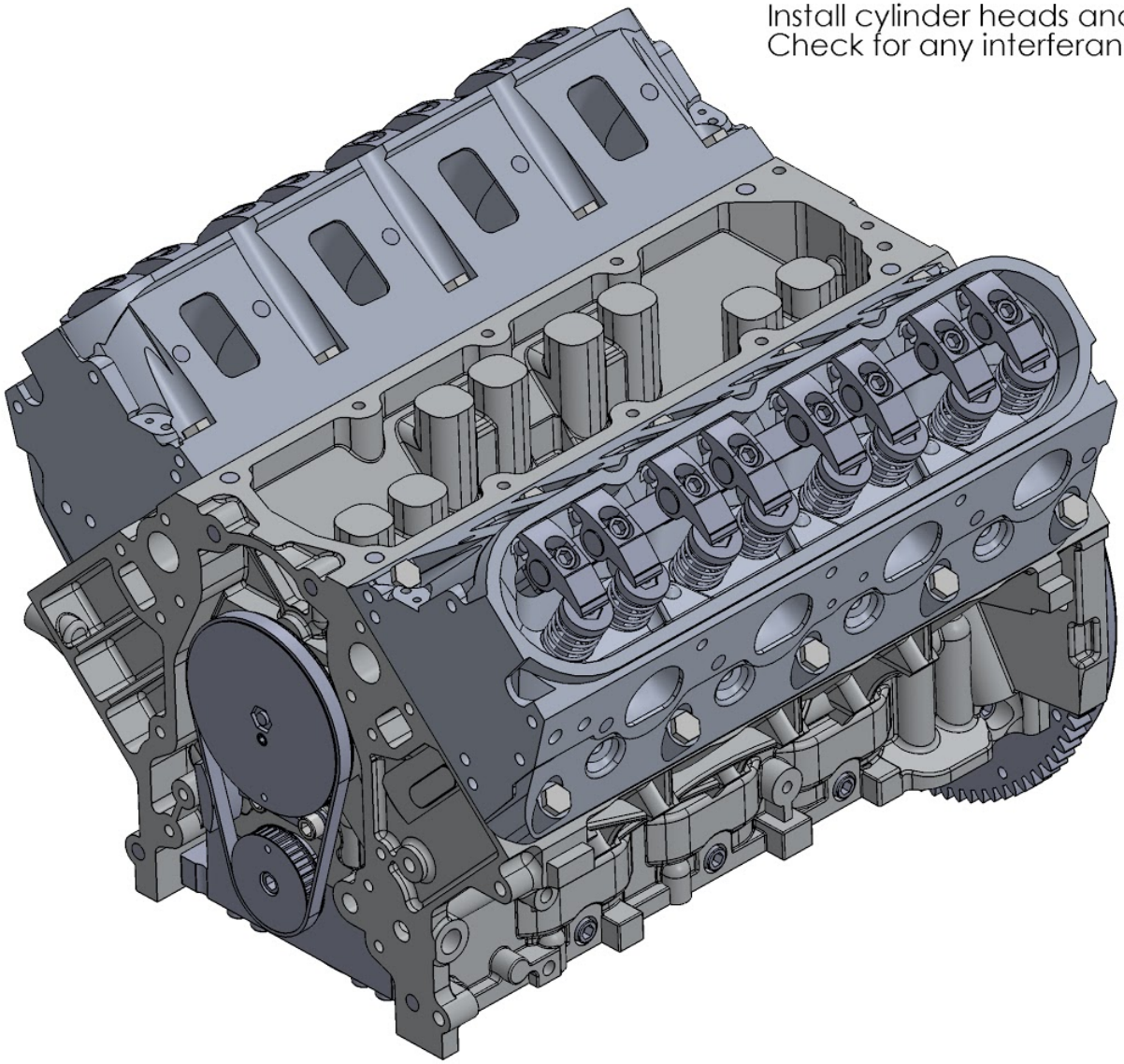

Assemble Starter

ITEM NO.	PART NUMBER	QTY.
1	500rpm geared motor	1
2	m3 x 4mm set screw	1
3	m3 nut	1
4	M3 x 8mm SHCS	2
5	Starter Mount	1
6	Starter Drive Gear	1

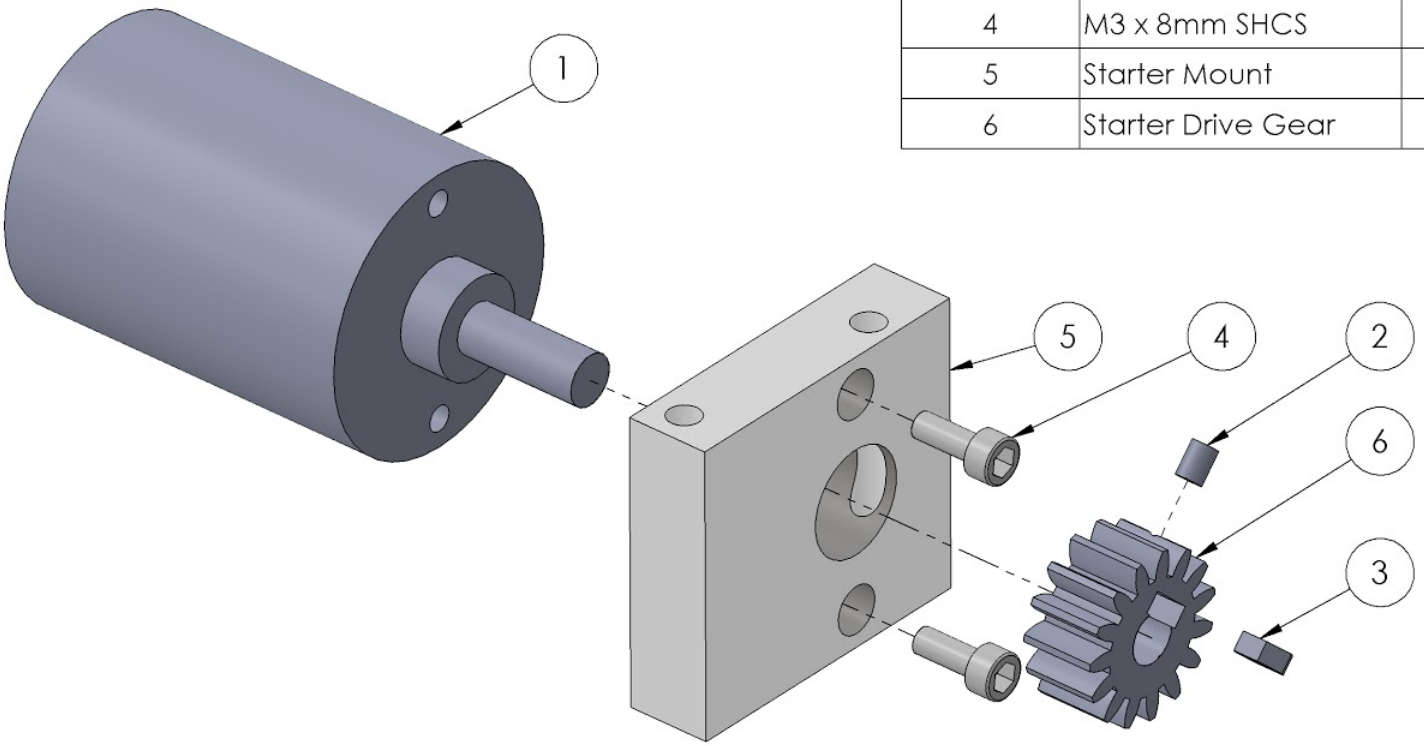

Install Starter Assembly

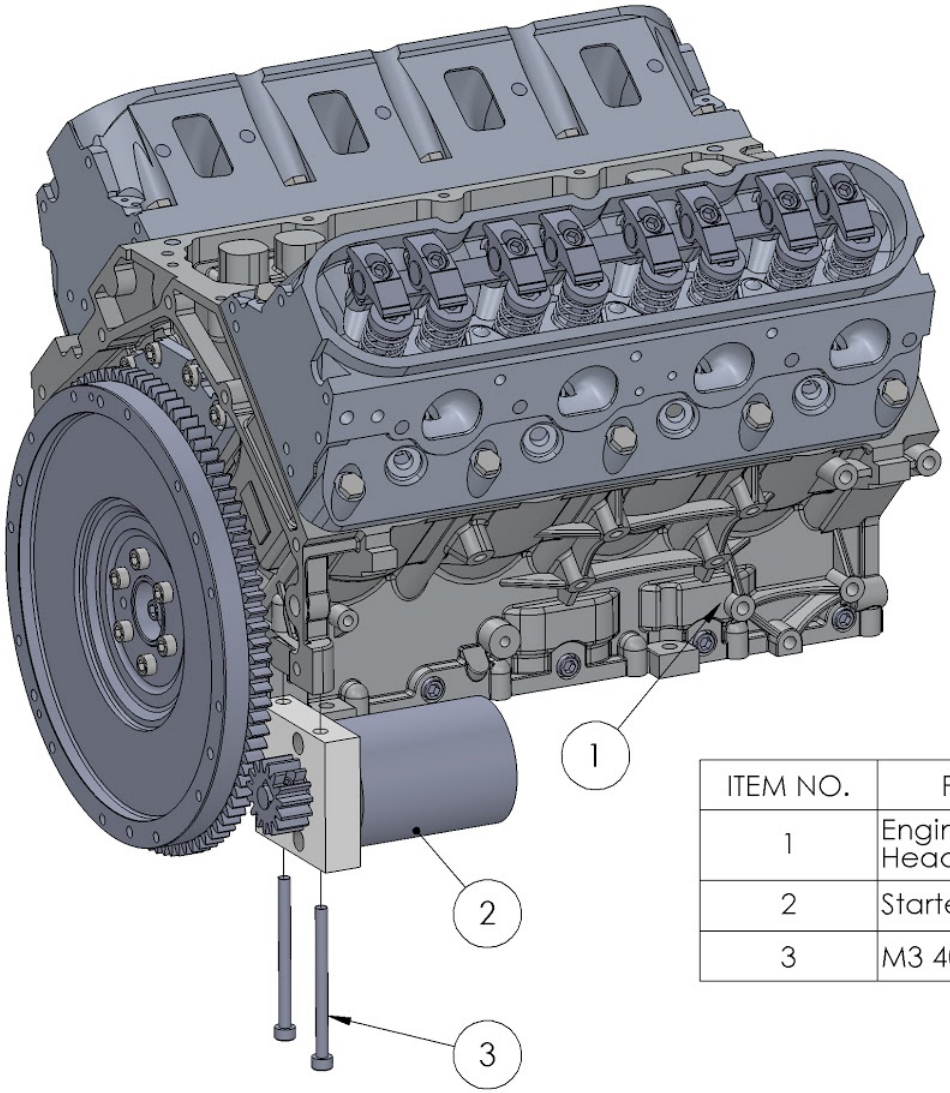

ITEM NO.	PART NUMBER	QTY.
1	Engine Block With Heads Assembly	1
2	Starter Assembly	1
3	M3 40mm SHCS	2

Install All Remaining Parts

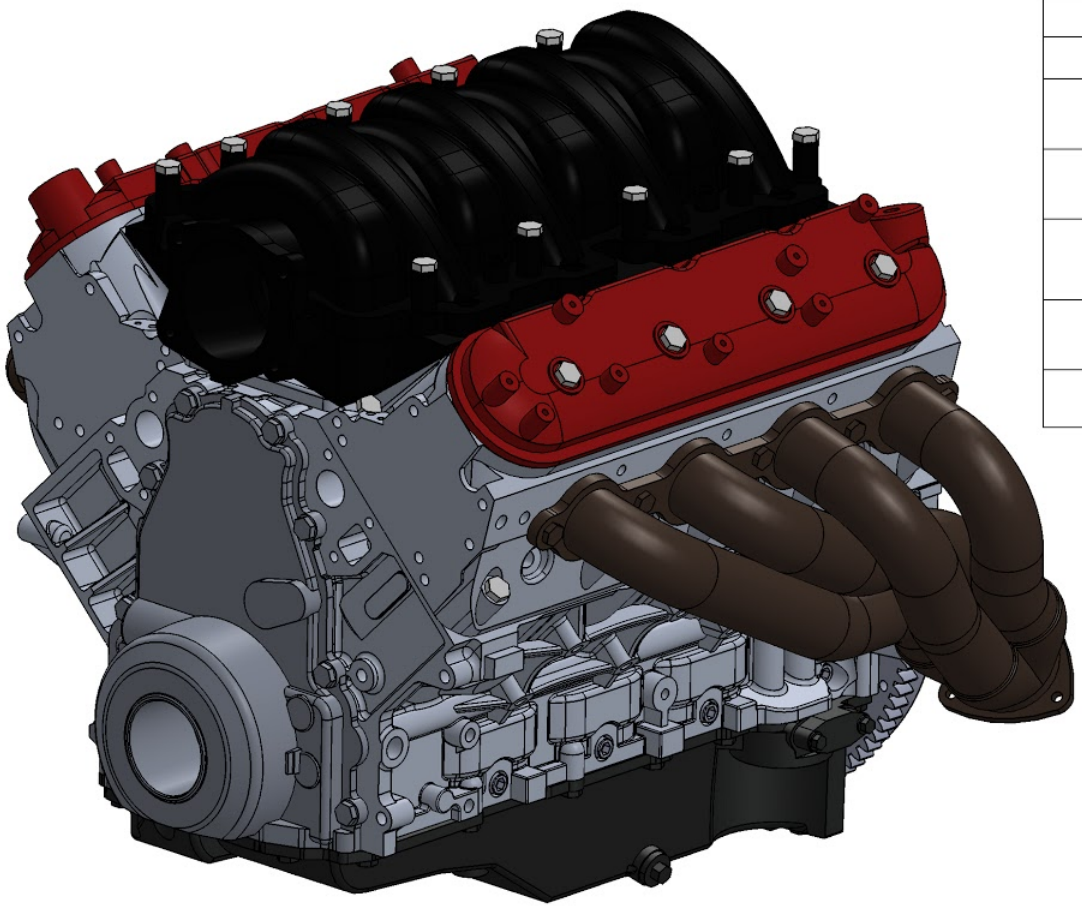

ITEM NO.	PART NUMBER	QTY.
1	Engine Block Starter Assembly	1
2	Valley Plate Assembly	1
3	Timing Cover Assembly	1
4	Oil Pan Assembly	1
5	Passenger Side Valve Cover Assembly	1
6	Passenger Side Header Assembly	1
7	Drivers Side Header Assembly	1
8	Drivers Side Valve Cover Assembly	1
9	Intake Manifold Assembly	1